FITZGERALD FORMLINERS

Patterns may be available in other formliner types not shown below. Please ask your Fitzgerald Formliner Sales Representative for details.

Style: Sandblast (8 Results Found.) 1

16981 Exposed Aggregate

0.375 Max depth, small, irregular pebble finish.

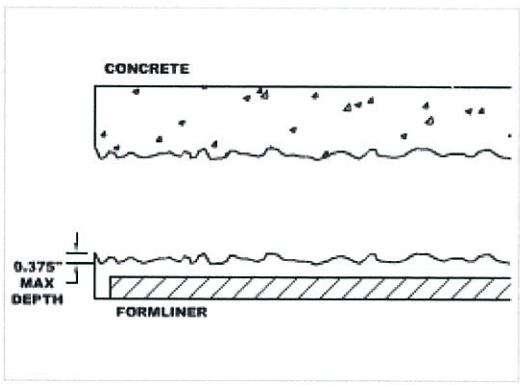

Download Pattern PDF

GrayLastic
Elastomeric Urethane - Up to 100 uses.
Mold-bonded to 0.75" plywood. Add 1.125" to liner thickness.
Click here for cut-sheet

Part Size:
48" Wide x 120" Long

Max Depth: 0.375"
Notes:
For a similar pattern in plastic, see pattern 16992.

16990 Light Sandblast

0.0625" maximum depth, no aggregate exposed.

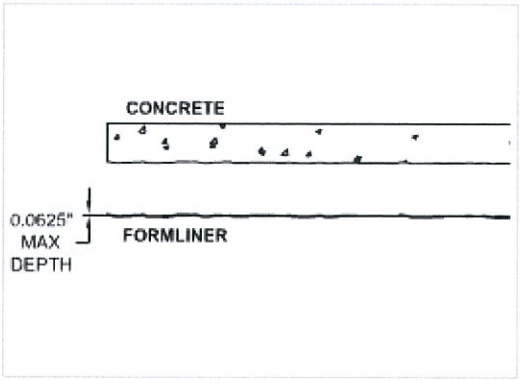

Download Pattern PDF

Vac-U-Form
Styrene - Single use.
ABS Plastic - Up to 15 reuses.
Click here for cut-sheet

Part Size:
48" Wide x 120" Long

GrayLastic
Elastomeric Urethane - Up to 100 uses.
Mold-bonded to 0.75" plywood. Add 1.125" to liner thickness.

Part Size:
48" Wide x 220" Long

Max Depth: 0.0625"

16991 Medium Sandblast

0.125" maximum depth, top of aggregate exposed.

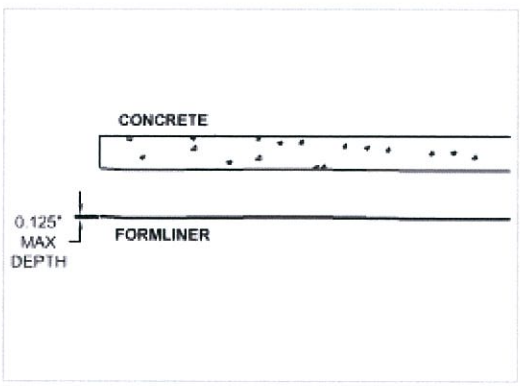

Download Pattern PDF

GrayLastic
Elastomeric Urethane - Up to 100 uses.
Mold-bonded to 0.75" plywood. Add 1.125" to liner thickness.
Click here for cut-sheet

Part Size:
48" Wide x 120" Long

Vac-U-Form
Styrene - Single use.
ABS Plastic - Up to 15 reuses.
Click here for cut-sheet

Part Size:
48" Wide x 120" Long

Max Depth: 0.125"

16992 Heavy Sandblast

0.375" maximum depth, some aggregate fully exposed.

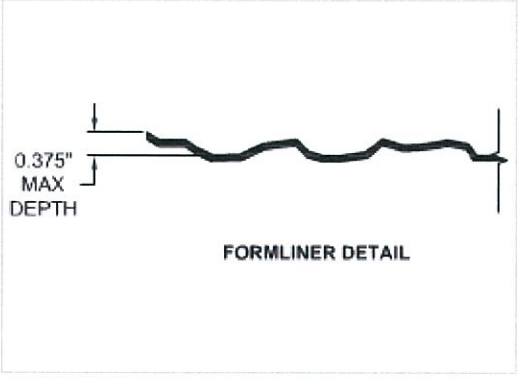

Download Pattern PDF

Vac-U-Form
Styrene - Single use.
ABS Plastic - Up to 15 reuses.
Click here for cut-sheet

Part Size:
48" Wide x 119.75" Long

GrayLastic
Elastomeric Urethane - Up to 100 uses.
Mold-bonded to 0.75" plywood. Add 1.125" to liner thickness.
Click here for cut-sheet

Part Size:
48" W x 120" H

Max Depth: 0.375"

16996 EIFS Texture (Simulated)

0.0625" maximum depth

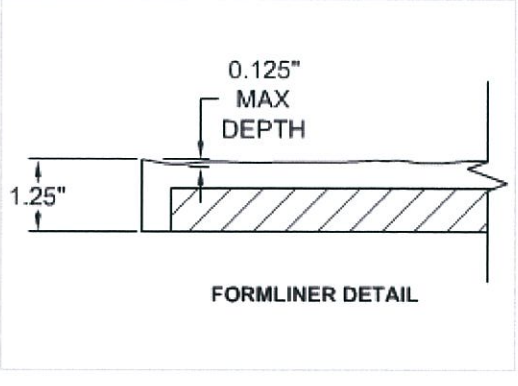

GrayLastic
Elastomeric Urethane - Up to 100 uses.
Mold-bonded to 0.75" plywood. Add 1.125" to liner thickness.
Click here for cut-sheet

Part Size:
72" Wide x 192" Long

Max Depth: 0.0625"
Notes:
Unbonded to plywood

Download Pattern PDF

17990 Broom Finish

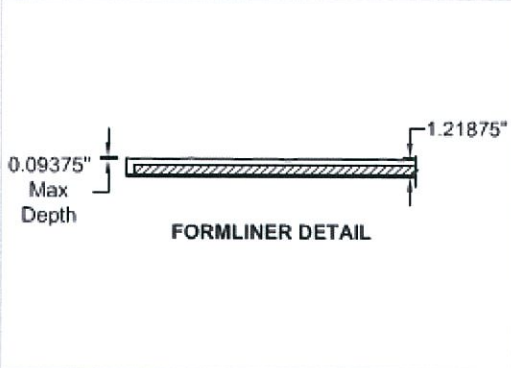

GrayLastic
Elastomeric Urethane - Up to 100 uses. Mold-bonded to 0.75" plywood. Add 1.125" to liner thickness.
Click here for cut-sheet

Max Depth: 0.09375"

Part Size:

108" Wide x 67.5" High

Finish in the 67.5" direction

Download Pattern PDF

17992 Texas Sandblast

0.25" maximum depth

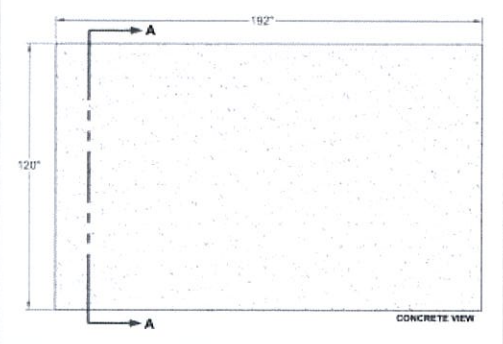

No
CAD Drawing
Available

GrayLastic
Elastomeric Urethane - Up to 100 uses. Mold-bonded to 0.75" plywood. Add 1.125" to liner thickness.
Click here for cut-sheet

Max Depth: 0.25"

Part Size:
120" W x 48" H

17998 Bushhammer

1/4" Medium Texture

No
CAD Drawing
Available

GrayLastic
Elastomeric Urethane - Up to 100 uses. Mold-bonded to 0.75" plywood. Add 1.125" to liner thickness.
Click here for cut-sheet

Max Depth: 0.75"

Part Size:
120" W x 168" H

Download Pattern PDF

Style: Sandblast (8 Results Found.) 1