STATE	FEDERAL PROJECT NO.
N.J.	STP-0115(104)

McCormick Taylor
Engineers & Planners Since 1946

FILE NAME: X:\5072-01\Sea Isle Blvd\CADD\Sections\EARTHWORKSUMMARY.dgn
PEN TABLE: X:\5072-01\Sea Isle Blvd\CADD\Sections\EARTHWORK SUMMARY.tbl
REF. DATE: 01/04/2013
SCALE: 10.0000 ' / IN.

EARTHWORK SUMMARY

EXCAVATION

ROADWAY EXCAVATION, EARTH AVAILABLE FOR EMBANKMENT, COMMON

EXCAVATION FROM PLAN SHEETS	7512 C.Y.
EXCAVATION OF SURCHARGE	39500 C.Y.
LESS STRIPPING IN CUTS	0 C.Y.
TOTAL ROADWAY EXCAVATION, EARTH	47012 C.Y.
TOTAL ROADWAY EXCAVATION, EARTH AVAILABLE FOR EMBANKMENT, COMMON (INCLUDING 10% SHRINKAGE)	42311 C.Y.

EMBANKMENT

EMBANKMENT, I-11 REQUIRED

EMBANKMENT FROM PLAN SHEETS	85409 C.Y.
EMBANKMENT FOR SURCHARGE	39500 C.Y.
STRIPPING IN FILLS	4272 C.Y.
TOTAL EMBANKMENT, I-11 REQUIRED	129181 C.Y.

EXCAVATED MATERIALS EXCESS (SUITABLE FOR EMBANKMENT)	NO EXCESS AVAILABLE
EXCAVATED MATERIALS TO BE BORROWED (SUITABLE FOR EMBANKMENT)	86870 C.Y.

TOPSOILING

TOPSOIL AVAILABLE

STRIPPING IN CUTS	0 C.Y.
STRIPPING IN FILLS	4272 C.Y.
TOTAL STRIPPING AVAILABLE FOR TOPSOIL	4272 C.Y.

TOPSOIL REQUIRED

TOPSOILING, 4" THICK FROM PLAN SHEETS	33613 S.Y.
TOPSOILING, 4" THICK REQUIRED IN S.Y.	33613 S.Y.
TOPSOILING, 4" THICK REQUIRED IN C.Y.	3735 C.Y.

STRIPPING MATERIALS EXCESS (SUITABLE FOR TOPSOILING)	537 C.Y.
STRIPPING MATERIALS TO BE BORROWED	NO BORROW REQUIRED

NOTES:

1. IF ADDITIONAL SUITABLE MATERIAL FOR EMBANKMENT IS OBTAINED FROM ANY EXCAVATION, THE QUANTITY OF BORROW WILL BE REDUCED ACCORDINGLY.
2. IF ADDITIONAL SUITABLE MATERIAL FOR TOPSOIL IS OBTAINED FROM ANY STRIPPING, THE QUANTITY OF TOPSOIL WILL BE REDUCED ACCORDINGLY.

X-10

COUNTY OF CAPE MAY

CROSS SECTIONS

SEA ISLE BOULEVARD (C.R. 625)
FROM GARDEN STATE PARKWAY TO
BRIDGE OVER LUDLAM THOROFARE

McCormick Taylor, Inc.
CERTIFICATION OF AUTHORIZATION NO. 24GA28044300
DATE: 4/4/14
ANTHONY M. DIMAGGIO, P.E.
NEW JERSEY PROFESSIONAL ENGINEER LICENSE NO. 24GE04136200

STATE	FEDERAL PROJECT NO.
N.J.	STP-0115(104)

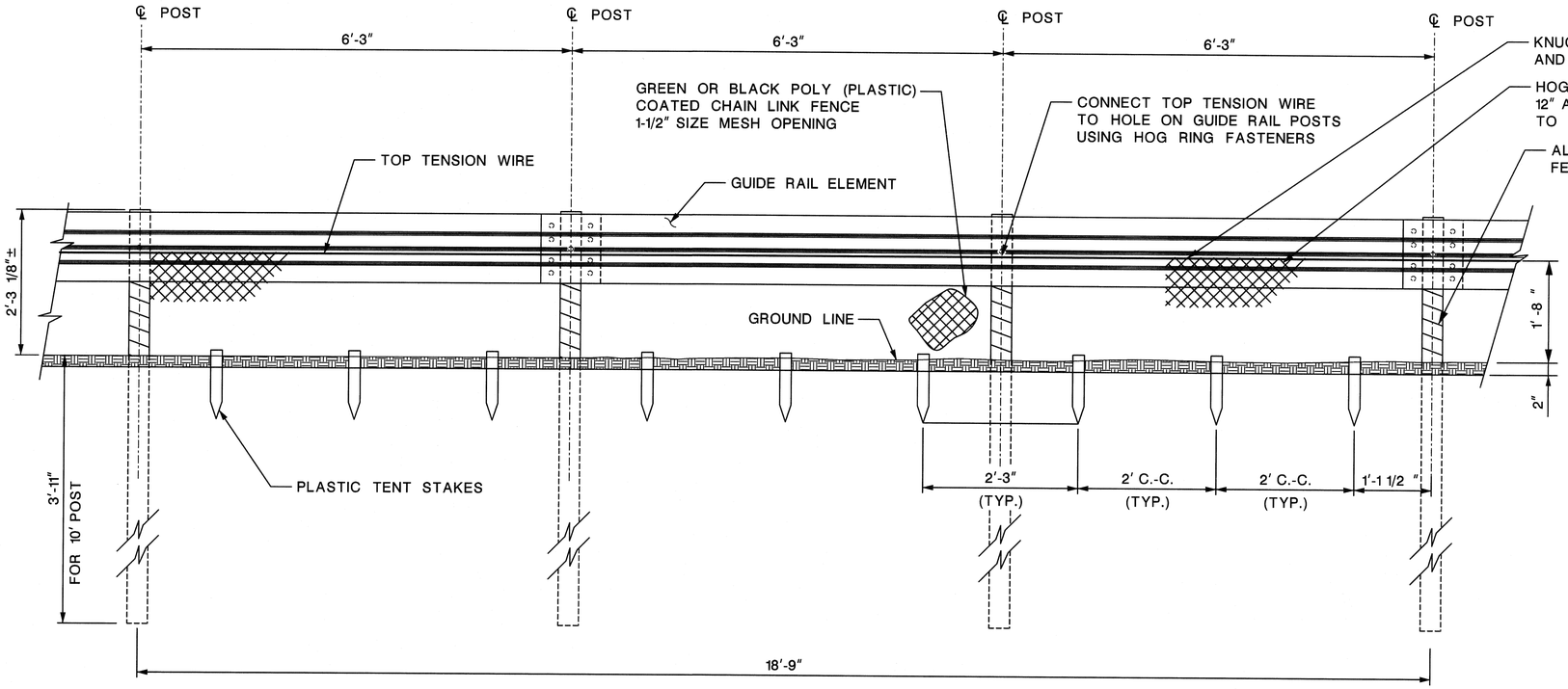

ELEVATION OF TURTLE EXCLUSION FENCE (GUIDE RAIL MOUNTED)

N.T.S.

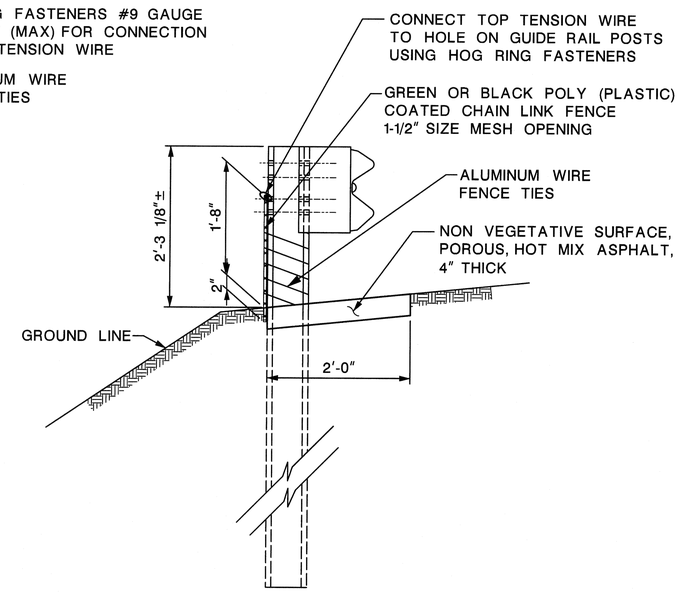

SIDE VIEW OF TURTLE EXCLUSION FENCE (GUIDE RAIL MOUNTED)

N.T.S.

TURTLE EXCLUSION FENCE

DTL-1 / DTL-16

COUNTY OF CAPE MAY

CONSTRUCTION DETAILS

SEA ISLE BOULEVARD (C.R. 625)
FROM GARDEN STATE PARKWAY TO
BRIDGE OVER LUDLAM THOROFARE

McCormick Taylor, Inc.
CERTIFICATION OF AUTHORIZATION NO. 24GA28044300
DATE: 4/9/19
ANTHONY M. DIMAGGIO, P.E.
NEW JERSEY PROFESSIONAL ENGINEER LICENSE NO. 24GE04136200

135 / 170

McCormick Taylor
Engineers & Planners Since 1946

FILE NAME: x:\5072-01\sea isle blvd\cad\construction details\DTL-01_TurtleFence.dgn
PEN TABLE: X:\5072-01\Sea Isle Blvd\CADD\Construction Details\Coral Details.tbl
REV. DATE: 10/14/2013
SCALE: 1:200 / IN.

STATE	FEDERAL PROJECT NO.
N.J.	STP-0115(104)

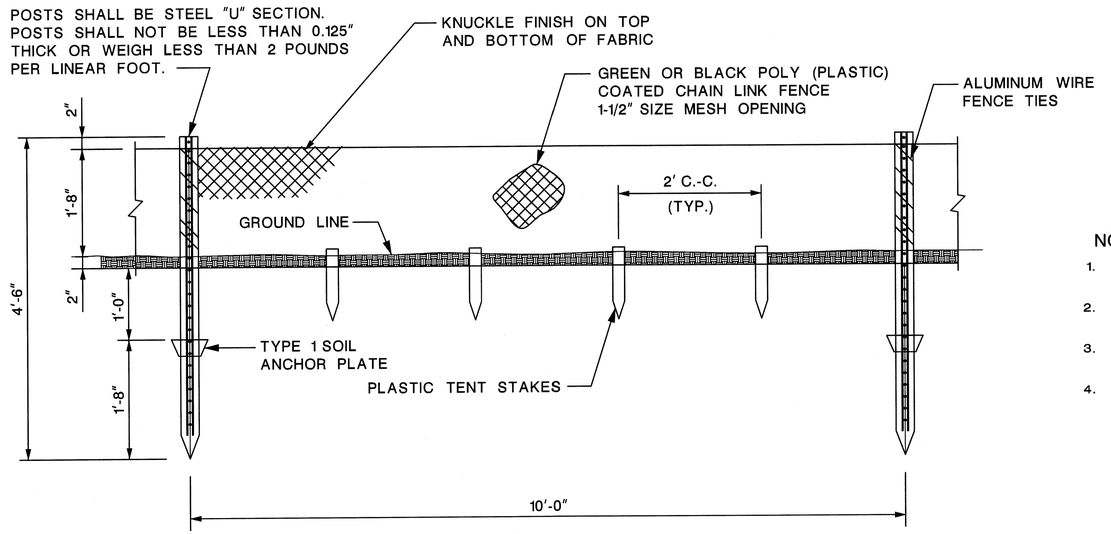

TURTLE EXCLUSION FENCE (GROUND MOUNTED)

N.T.S.

NOTES:

1. ANCHOR POST AND TOP POST SHALL BE OF EQUAL WEIGHT/FEET.
2. SOIL ANCHOR PLATE SHALL BE ATTACHED TO ALL ANCHOR POSTS.
3. THE MATERIAL FOR THE SOIL ANCHOR PLATES SHALL BE CARBON SHEET STEEL.
4. THE STEEL "U" POST SHALL BE GRADE 60.

WEIGHT * LBS. / FT.	DIMENSIONS (IN)				AREA IN.^{2}	X-X AXIS **		Y-Y AXIS	
	"A"	"B"	"C"	"D"		I(IN.^{4})	S(IN.^{3})	I(IN.^{4})	S(IN.^{3})
2.50	1.516	3.062	1.278	0.669	0.760	0.228	0.313	0.539	0.352

* ± 5%
** GOVERNING SECTION

TYPE 1 STEEL U-POST PROPERTIES

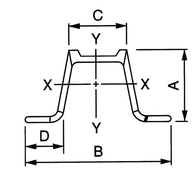

TYPE 1 STEEL U-POST

N.T.S.

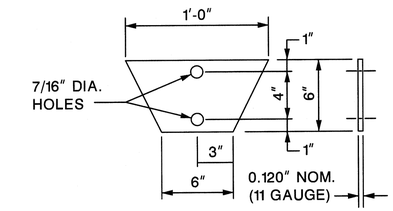

TYPE 1 SOIL ANCHOR PLATE

N.T.S.

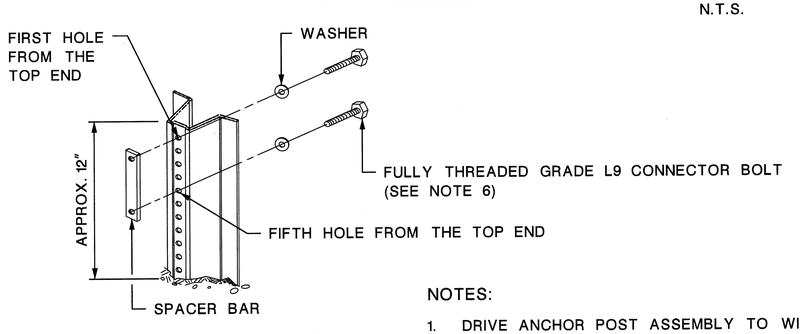

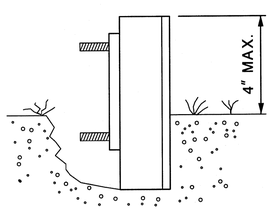

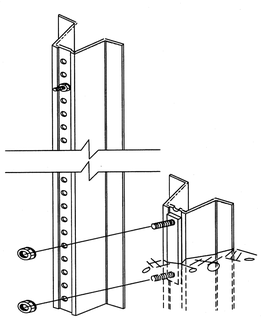

NOTES:

1. DRIVE ANCHOR POST ASSEMBLY TO WITHIN APPROXIMATELY 12 INCHES ABOVE GROUND LEVEL. PLACE BOLT AND WASHER IN FIRST AND FIFTH HOLES FROM THE TOP END, AND SECURE BOLTS ONTO SPACER.
2. DRIVE ANCHOR POST ASSEMBLY TO WITHIN A MAXIMUM OF 4 INCHES ABOVE GROUND LEVEL.
3. DIG OUT AROUND BACK OF ANCHOR POST ASSEMBLY TO ALLOW ROOM FOR TOP POST TO BE ATTACHED.
4. NEST TOP POST ASSEMBLY ONTO PROTRUDING ANCHOR POST ASSEMBLY BOLTS, THROUGH THE FIRST AND FIFTH HOLES FROM THE BOTTOM OF THE TOP POST.
5. PLACE AND TIGHTEN A SELF-LOCKING FLANGE NUT ON EACH BOLT. WHEN INSTALLATION IS COMPLETE, TOP OF GROUND POST SHALL NOT EXCEED 4 INCHES ABOVE GROUND LEVEL.
6. SIZE OF CONNECTOR BOLT FOR TYPE 1, 5/16 " x 1 1/2 "
7. THE CONNECTOR BOLTS SHALL BE FULLY THREADED. EACH CONNECTOR BOLT AND NUT SHALL BE CLEARLY STAMPED WITH MANUFACTURER'S IDENTIFYING MARK.

ANCHOR POST ASSEMBLY SIGN SUPPORTS

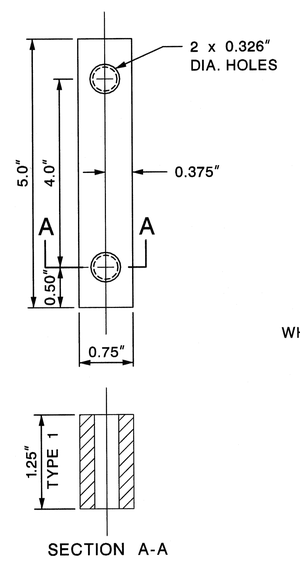

SPACER BAR

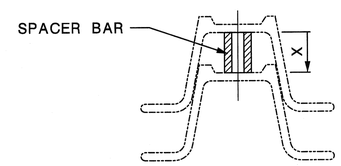

WHEN X IS GREATER THAN 0.75", USE TYPE 1 SPACER BAR

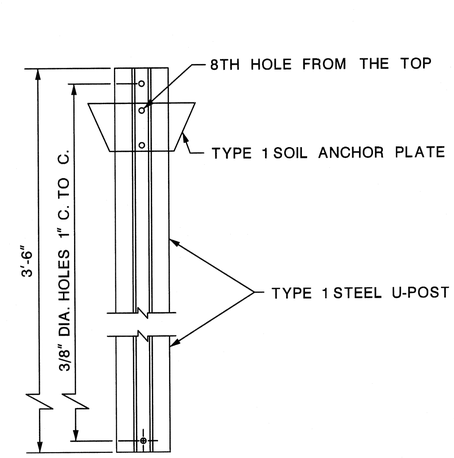

TYPE 1 ANCHOR POST ASSEMBLY

N.T.S.

TURTLE EXCLUSION FENCE

DTL-2 / DTL-16

COUNTY OF CAPE MAY

CONSTRUCTION DETAILS

SEA ISLE BOULEVARD (C.R. 625)
FROM GARDEN STATE PARKWAY TO
BRIDGE OVER LUDLAM THOROFARE

McCormick Taylor, Inc.
CERTIFICATION OF AUTHORIZATION NO. 24GA28044300
DATE: 4/4/14
ANTHONY M. DIMAGGIO, P.E.
NEW JERSEY PROFESSIONAL ENGINEER LICENSE NO. 24GE04136200

136 / 170

McCormick Taylor
Engineers & Planners Since 1946

FILE NAME: x:\5072-01\sea isle blvd\cad\construction details\DTL-02_TurtleFence.dgn
PEN TABLE: X:\5072-01\Sea Isle Blvd\ICADD\Construction Details\Consar Details.tbl
REV. DATE: 1/10/2013
SCALE: 1.0000' / IN.

STATE	FEDERAL PROJECT NO.
N.J.	STP-0115(104)

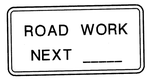

G20 - 1 [60" x 24"]
(10 S.F.)

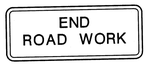

G20 - 2A [48" x 24"]
(8 S.F.)

M4 - 9L (LEFT) [30" x 24"]
M4 - 9R (RIGHT) [30" x 24"]
(5 S.F.)

M4 - 9 (L or R) (S) [48" x 36"]
(12 S.F.)

M4 - 9LX (LEFT) [30" x 24"]
M4 - 9RX (RIGHT) [30" x 24"]
(5 S.F.)

M4 - 9 (L or R) XS [48" x 36"]
(12 S.F.)

M4 - 9X [30" x 24"]
(5 S.F.)

M4 - 9X (S) [48" x 36"]
(12 S.F.)

M4 - 10L (LEFT) [48" x 18"]
M4 - 10R (RIGHT) [48" x 18"]
(6 S.F.)

M4 - 8a [24" x 18"]
(3 S.F.)

M4 - 11 (S) [48" x 36"]
(12 S.F.)

R2 - 1 [36" x 48"]
(12 S.F.)

R2 - 1 (S) [48" x 60"]
(20 S.F.)

R4 - 1 [24" x 30"]
(5 S.F.)

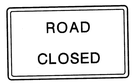

R11 - 2 [48" x 30"]
(10 S.F.)

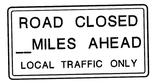

R11 - 3 [60" x 30"]
(12.5 S.F.)

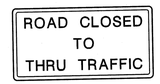

R11 - 4 [60" x 30"]
(12.5 S.F.)

(L OR R)

W1 - 4a [48" x 48"]
(16 S.F.)

(L OR R)

W1- 6 [48" x 24"]
(8 S.F.)

W1 - 6 (S) [60" x 30"]
(12.5 S.F.)

(L OR R)

W4 - 2 (S) [48" x 48"]
(16 S.F.)

W5 - 1 (S) [48" x 48"]
(16 S.F.)

W6 - 3 [48" x 48"]
(16 S.F.)

W20 - 7b [48" x 48"]
(16 S.F.)

W13 - 1 [18" x 18"]
(2.3 S.F.)

W13 - 1 (S) [24" x 24"]
(4 S.F.)

W20 - 1A [48" x 48"]
(16 S.F.)

W20 - 2 [48" x 48"]
(16 S.F.)

W20 - 3 [48" x 48"]
(16 S.F.)

W20 - 4 [48" x 48"]
(16 S.F.)

(L OR R) (CENTER)
W20 - 5 [48" x 48"]
(16 S.F.)

W20 - 7a [48" x 48"]
(16 S.F.)

W21 - 5 (S) [48" x 48"]
(16 S.F.)

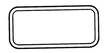

M4 - 9N [30" x 12" MIN.]
(2.5 S.F.)

(SIZE WILL VARY WITH LENGTH OF STREET NAME)

STREET NAME SIGN TO BE USED IN CONJUNCTION WITH M4 - 9 SIGNS BLACK ON ORANGE

[24" x 24"]
(4 S.F.)

[30" x 30"] (S)
(6.3 S.F.)

[24" x 24"]
(4 S.F.)

[30" x 30"] (S)
(6.3 S.F.)

W8 - 1 (S) [48" x 48"]
(16 S.F.)

W8 - 9a [48" x 48"]
(16 S.F.)

W8 - 14 [48" x 48"]
(16 S.F.)

W8 - 14A [48" x 48"]
(16 S.F.)

W99 - 2 [48" x 48"]
(16 S.F.)

GENERAL NOTES:

1. DIMENSIONS, COLORS AND DETAILS OF VARIOUS SIZE SIGNS, AND ACCESSORY PANELS TO FOLLOW STANDARDS IN THE CURRENT "STANDARD HIGHWAY SIGN PUBLICATION" AND THE CURRENT "MANUAL ON UNIFORM TRAFFIC CONTROL DEVICES FOR STREETS AND HIGHWAYS".
2. (S) REPRESENTS A SPECIAL SIZE SIGN.
3. LETTERS AND NUMERALS SHALL CONFORM TO THE CURRENT MANUAL, "STANDARD ALPHABETS FOR HIGHWAY SIGNS" U.S. DEPARTMENT OF TRANSPORTATION, FEDERAL HIGHWAY ADMINISTRATION.
4. THE CONTRACTOR SHALL OBTAIN THE APPROVAL OF THE ENGINEER FOR THE DISTANCE TO BE USED ON THE ADVANCE WARNING SIGNS, AND FOR THE SPEED LIMIT TO BE USED ON THE R2-1 SIGN.
5. DISTANCE LEGEND: SIGN NUMBER FOLLOWED BY LETTER & DISTANCE

LETTER	DISTANCE
A	1500'
B	1000'
C	500'
D	MILE
E	__MILES AHEAD
F	AHEAD

BACKING MATERIAL

1. ALUMINUM SHALL BE FLAT SHEET OF ALLOY AND TEMPER 5052-H38 OR 6061-T6 :
   A. 0.10" THICK FOR ALL CONSTRUCTION SIGNS EXCEPT SIGNS SHOWN MOUNTED ON BREAKAWAY BARRICADES.
   B. 0.024" THICK FOR ALL CONSTRUCTION SIGNS SHOWN MOUNTED ON BREAKAWAY BARRICADES.

TEMPORARY SIGN SUPPORTS

1. SIGN SUPPORTS SHALL BE OF WELL SEASONED LUMBER, S4S, FREE OF SPLITS, KNOTS AND WARPS, OR OF STEEL COMPONENTS.
2. WOOD POSTS SHALL HAVE A UNIFORM CROSS-SECTION AND SHALL NOT EXCEED THE FOLLOWING DIMENSIONS FOR:

   SINGLE POST = 4" x 6"
   TWO POSTS = 3" x 6" OR 4" x 5"
   THREE POSTS = 3" x 5" OR 4" x 4"

   4" X 6" WOOD POSTS SHALL BE MODIFIED BY DRILLING 1½ INCH DIAMETER HOLES 4 INCHES AND 18 INCHES ABOVE THE GROUND LINE AND PERPENDICULAR TO THE ROADWAY CENTERLINE.
3. NO BRACING IS PERMITTED. VERTICAL CLEARANCES FOR SIGNS MOUNTED ON WOOD SUPPORTS SHALL BE 7 FOOT MINIMUM. EMBEDMENT DEPTH FOR THE WOOD POST SHALL NOT EXCEED 3.5 FEET.
4. STEEL POSTS SHALL BE IN ACCORDANCE WITH THE STANDARD DETAIL FOR U-POST SIGN SUPPORT.
5. TEMPORARY SIGN SUPPORTS NOT MEETING THIS CRITERIA SHALL BE SHIELDED BY A LONGITUDINAL BARRIER OR CRASH CUSHIONS.

SIGN FACES

1. SIGN FACES SHALL BE ASTM D 4956 TYPE VII OR VIII FLUORESCENT ORANGE SHEETING.

FASTENING

1. ALL SIGNS SHALL BE SECURELY FASTENED TO THEIR SUPPORTS WITH BOLTS, NUTS AND WASHERS IN ACCORDANCE WITH THE SPECIFICATIONS.

NOTE:
THE BORDER, THE WORDS "GIVE US A", "SLOW DOWN!", AND THE BRAKE PEDAL ARE BLACK; LEAVING THE WORD "BRAKE" ORANGE.

CD-159-6

DTL-3 / DTL-16

COUNTY OF CAPE MAY

CONSTRUCTION DETAILS

SEA ISLE BOULEVARD (C.R. 625)
FROM GARDEN STATE PARKWAY TO
BRIDGE OVER LUDLAM THOROFARE

McCormick Taylor, Inc.
CERTIFICATION OF AUTHORIZATION NO. 24GA28044300
DATE: 4/14/14
ANTHONY M. DIMAGGIO, P.E.
NEW JERSEY PROFESSIONAL ENGINEER LICENSE NO. 24GE04136200

137 / 170

McCormick Taylor
Engineers & Planners
Since 1946

FILE NAME: x:\5072-01\(sea isle blvd)\cad\construction details\DTL-03-CD-159-6CrossSigns.dgn
PEN TABLE: x:\5072-01\(sea isle blvd)\CAD\Construction Details\Cover Details.tbl
REF(S) DATE: 10/17/2013
SCALE: 29.9999 1 / IN.

STATE	FEDERAL PROJECT NO.
N.J.	STP-0115(104)

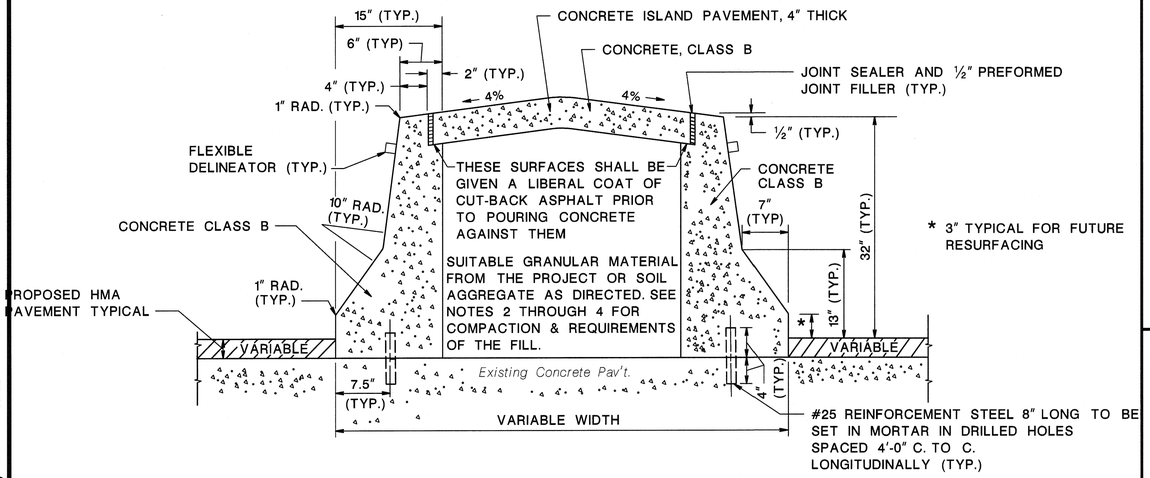

15" x VARIABLE HEIGHT CONCRETE BARRIER CURB, DOWELLED

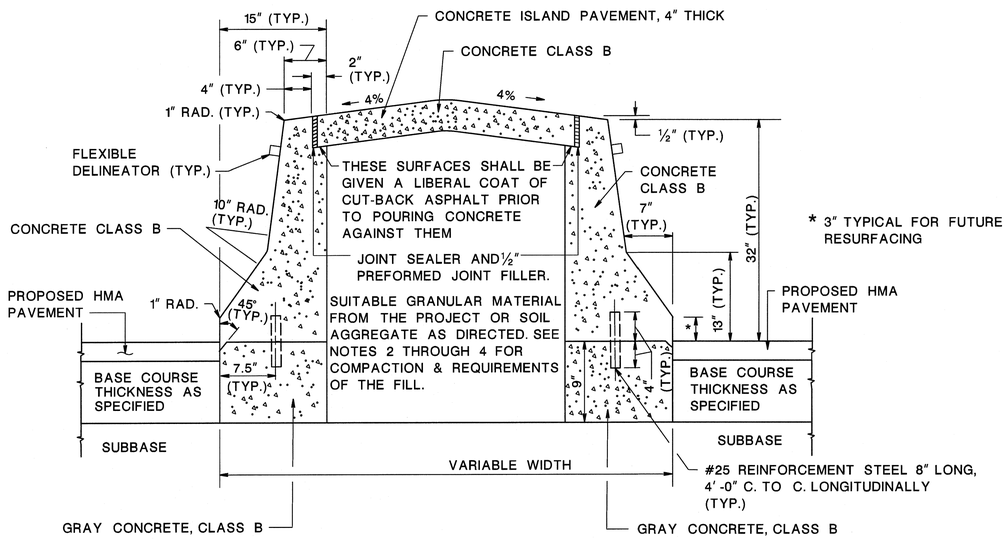

15" x 41" CONCRETE BARRIER CURB

NOTES:

1. SEE GENERAL NOTES APPLYING TO ALL BARRIER CURB CD-607-3.2.
2. COMPACTION SHALL BE IN ACCORDANCE WITH THE DIRECTED METHOD OF THE NJDOT STANDARD SPECIFICATIONS AND ITS SUPPLEMENTS.
3. THE FILL BETWEEN THE CURBS SHALL BE SHAPED AND COMPACTED TO A FIRM EVEN SURFACE. UNSTABLE MATERIAL SHALL BE REMOVED AND REPLACED WITH ACCEPTABLE MATERIAL WHICH SHALL BE COMPACTED.
4. SOIL LIFTS SHALL BE LIMITED TO 12 INCHES AND EACH LIFT SHALL BE COMPACTED.

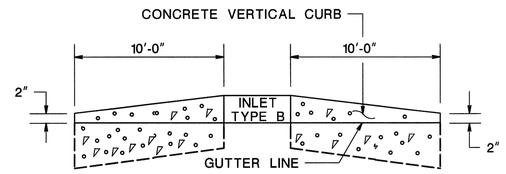

CURB TREATMENT AT BERM SECTION AND ALL CURB ENDS

CD-607-2.2

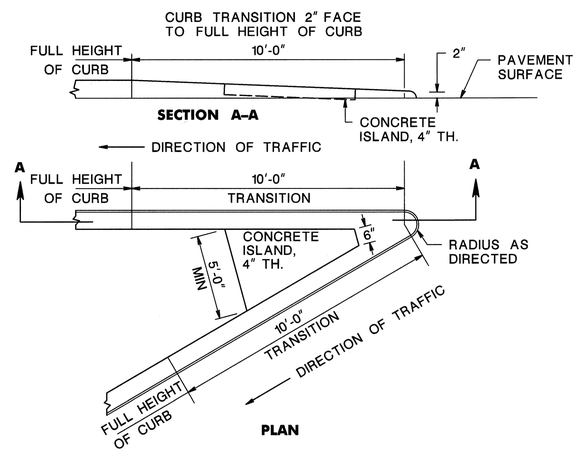

CD-607-2.3

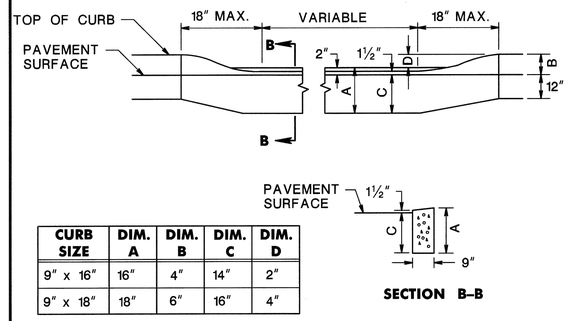

CURB SIZE	DIM. A	DIM. B	DIM. C	DIM. D
9" x 16"	16"	4"	14"	2"
9" x 18"	18"	6"	16"	4"

METHOD OF DEPRESSING CURB AT DRIVEWAYS

CD-607-2.4

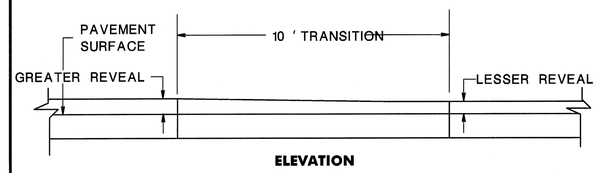

LINEAR CURB TRANSITION

CD-607-2.5

REINFORCEMENT STEEL IS IN METRIC UNITS

HMA = HOT MIX ASPHALT

BARRIER CURB AND VERTICAL CURB

N.T.S.

DTL-4 / DTL-16

COUNTY OF CAPE MAY

CONSTRUCTION DETAILS

SEA ISLE BOULEVARD (C.R. 625)
FROM GARDEN STATE PARKWAY TO
BRIDGE OVER LUDLAM THOROFARE

McCormick Taylor, Inc.
CERTIFICATION OF AUTHORIZATION NO. 24GA28044300
DATE: 4/4/14
ANTHONY M. DIMAGGIO, P.E.
NEW JERSEY PROFESSIONAL ENGINEER LICENSE NO. 24GE04136200

138 / 170

McCormick Taylor
Engineers & Planners Since 1949

FILE NAME: x:\5072-01\sea isle blvd\cad\construction details\DTL-04-CD-607-2BarrierCurb.dgn
PEN TABLE: X:\5072-01\Sea Isle Blvd\CADD\Construction Details\Constr Details.tbl
REV. DATE: 10/14/2013
SCALE: 29.9999 / IN.

STATE	FEDERAL PROJECT NO.
N.J.	STP-0115(104)

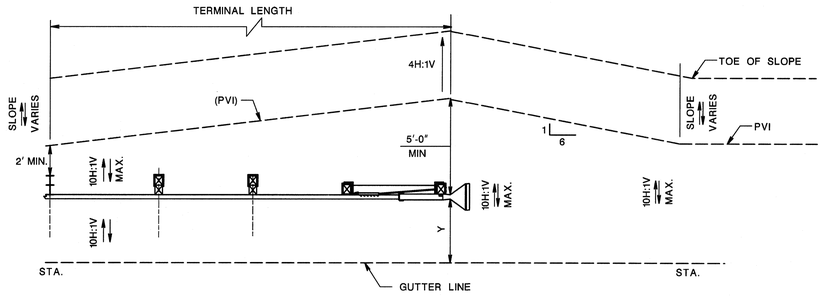

STANDARD GRADING

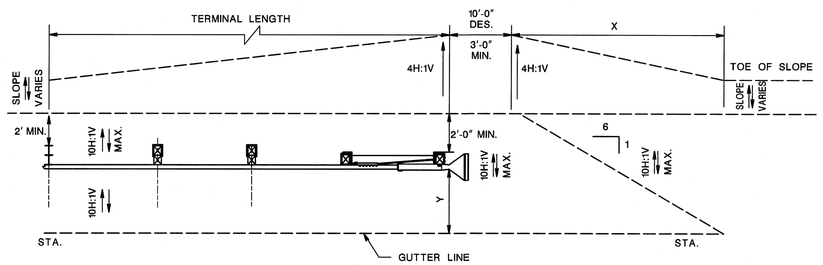

ALTERNATE GRADING

GRADING	STANDARD/ALTERNATE
STATION TO STATION	
OLD SEA ISLE BLVD (92+12.7 TO 92+50.0)	ALTERNATE
OLD SEA ISLE BLVD (95+65.0 TO 96+02.3)	ALTERNATE

Y = OFFSET FROM GUTTER LINE	X	X + 10' (DES.)
* 1'-0"	24'-0"	34'-0"
4'-0"	42'-0"	52'-0"
7'-0"	60'-0"	70'-0"
10'-0"	78'-0"	88'-0"
12'-0"	90'-0"	98'-0"

GRADING TREATMENT AT FLARED AND TANGENT TERMINALS

NOTE:

WHERE GUIDE RAIL IS INSTALLED FLUSH WITH THE GUTTER LINE, THE TANGENT TERMINAL SHALL BE CONSTRUCTED WITH A 50:1 STRAIGHT FLARE FOR ITS ENTIRE LENGTH SO THAT THE EXTRUDER HEAD DOES NOT PROTRUDE INTO THE ROADWAY.

CD-609-9.2

ROADSIDE RECOVERY AREA		
STATION	A	B
OLD SEA ISLE BLVD (92+12.7 TO 92+50.0)	37.5'	12'
OLD SEA ISLE BLVD (95+65.0 TO 96+02.3)	37.5'	12'

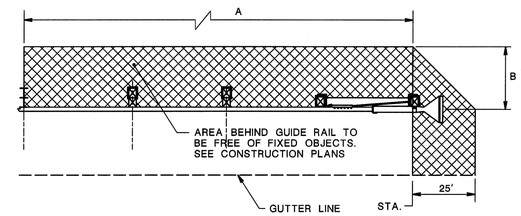

NOTE:

THERE SHALL BE NO FIXED OBJECTS IN FRONT OF THE GUIDE RAIL FOR ITS ENTIRE LENGTH.

RECOVERY AREA AT FLARED AND TANGENT TERMINALS

CD-609-9.1

GRADING AND ROADSIDE RECOVERY AREA AT FLARED AND TANGENT TERMINALS

CD-609-9

TEMPORARY CRASH CUSHION COMPRESSIVE BARRIER SUMMARY TABLE

ITEM NO.	DESCRIPTION	DESIGN SPEED	ROUTE AND STATION	PRODUCT	FOUNDATION	BACKUP SYSTEM
159200M	TEMPORARY CRASH CUSHION, COMPRESSIVE BARRIER, TYPE 2, WIDTH NARROW	45 MPH	IF AND WHERE DIRECTED	QUADGUARD II CZ 2 BAY, 24" WIDE 12'-11" LENGTH	EXISTING PAVEMENT	STEEL
159212M	TEMPORARY CRASH CUSHION, COMPRESSIVE BARRIER, TYPE 3, WIDTH NARROW	60 MPH	IF AND WHERE DIRECTED	QUADGUARD II CZ 5 BAY, 24" WIDE 19'-0" LENGTH	EXISTING PAVEMENT	STEEL

GENERAL NOTES:

1. FOR EACH LOCATION SHOWN IN THE TEMPORARY CRASH CUSHION, COMPRESSIVE BARRIER SUMMARY TABLE, INSTALL ONE (1) OF THE CRASH CUSHIONS LISTED FOR THAT LOCATION.
2. THE STATION LOCATION SHOWN IS APPROXIMATE AND MAY BE ADJUSTED IN THE FIELD.

CD-159-9.11

DTL-5
DTL-16

COUNTY OF CAPE MAY

CONSTRUCTION DETAILS

SEA ISLE BOULEVARD (C.R. 625)
FROM GARDEN STATE PARKWAY TO
BRIDGE OVER LUDLAM THOROFARE

McCormick Taylor, Inc.
CERTIFICATION OF AUTHORIZATION NO. 24GA28044300
DATE: 4/4/14
ANTHONY M. DIMAGGIO, P.E.
NEW JERSEY PROFESSIONAL ENGINEER LICENSE NO. 24GE04136200

McCormick Taylor
Engineers & Planners Since 1946
FILE NAME: x:\5072-01\sea isle blvd\cadd\construction details\DTL-05-CD-609-9GradingRoadsideRecoveryArea.dgn
PEN TABLE: X:\5072-01\Sea Isle Blvd\CADD\Construction Details\Constr Details.tbl
REV. DATE: 10/14/2013
SCALE: 29.9999 ' / IN.

STATE	FEDERAL PROJECT NO.
N.J.	STP-0115(104)

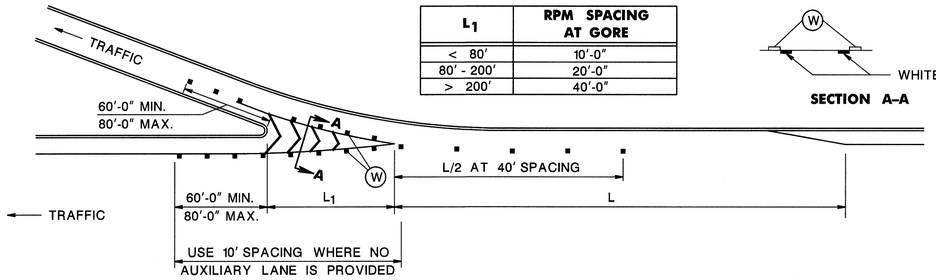

L_1	RPM SPACING AT GORE
< 80'	10'-0"
80' - 200'	20'-0"
> 200'	40'-0"

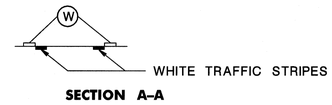

TYPICAL DECELERATION LANE TREATMENT

CD-610-1.1

LEGEND

(W) RPM, MONO-DIRECTIONAL WHITE LENS

(A) RPM, MONO-DIRECTIONAL AMBER LENS

CD-610-1.2

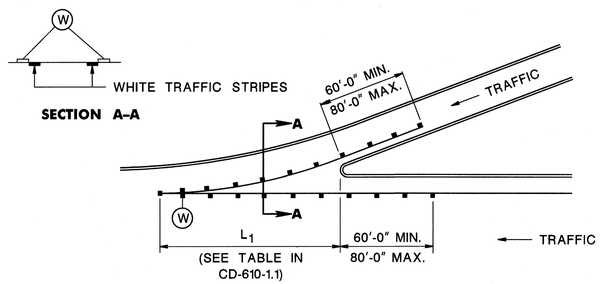

TYPICAL ACCELERATION LANE TREATMENT

CD-610-1.3

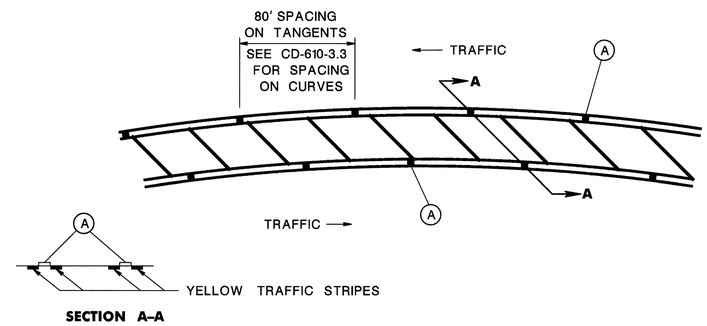

TYPICAL PAVED MEDIAN TREATMENT

CD-610-1.4

RAISED PAVEMENT MARKER, (RPM) LOCATION

N.T.S.

DTL-6
DTL-16

COUNTY OF CAPE MAY

CONSTRUCTION DETAILS

SEA ISLE BOULEVARD (C.R. 625)
FROM GARDEN STATE PARKWAY TO
BRIDGE OVER LUDLAM THOROFARE

McCormick Taylor, Inc.
CERTIFICATION OF AUTHORIZATION NO. 24GA28044300
DATE: 4/4/14
ANTHONY M. DIMAGGIO, P.E.
NEW JERSEY PROFESSIONAL ENGINEER LICENSE NO. 24GE04136200

140
170

McCormick Taylor
Engineers & Planners
Since 1946

FILE NAME: X:\5072-01\Sea Isle Blvd\CADD\Construction Details\DTL-06-CD-610-1RPM.dgn
PEN TABLE: X:\5072-01\Sea Isle Blvd\CADD\Construction Details\Coast Details.tbl
REV DATE: 10/14/2013
SCALE: 30.90'12" / IN.

STATE	FEDERAL PROJECT NO.
N.J.	STP-0115(104)

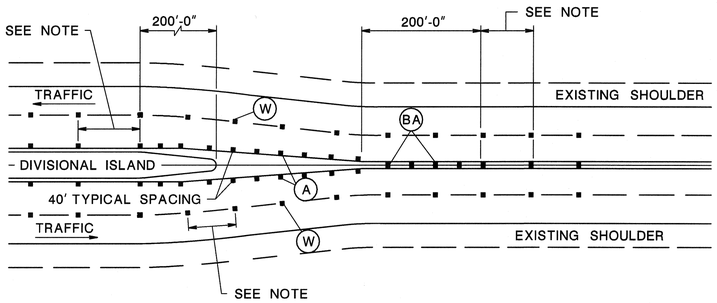

NOTE:
80 FOOT SPACING ON TANGENT FOR SPACING ON CURVES SEE CD-610-3.3

TYPICAL DIVISIONAL ISLAND TREATMENT

CD-610-2.1

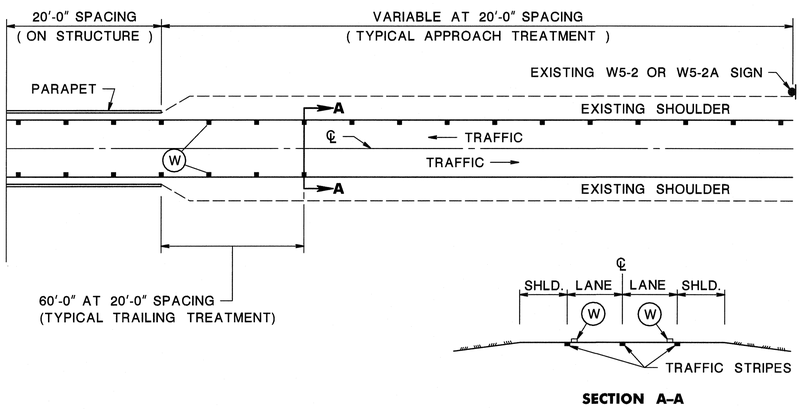

SECTION A–A

NARROW BRIDGE OR CULVERT TREATMENT

CD-610-2.2

LEGEND

- (W) RPM, MONO-DIRECTIONAL WHITE LENS
- (A) RPM, MONO-DIRECTIONAL AMBER LENS
- (BA) RPM, BI-DIRECTIONAL AMBER LENS

CD-610-2.3

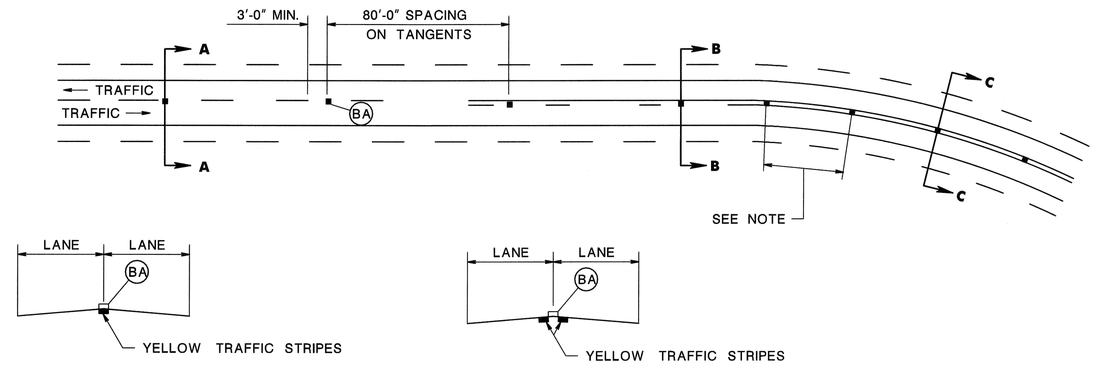

SECTION A–A

SECTION B–B & SECTION C–C

NOTE:
FOR SPACING ON CURVES SEE CD-610-3.3

TYPICAL TWO LANE SECTION

CD-610-2.4

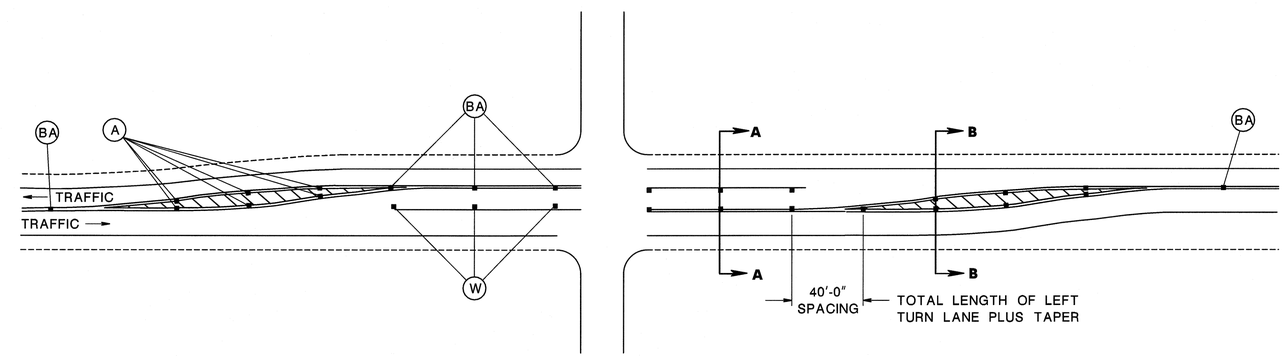

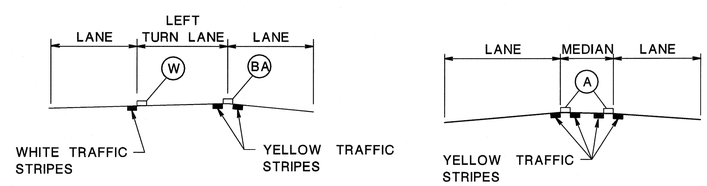

SECTION A–A

SECTION B–B

TYPICAL LEFT TURN LANE SECTION

CD-610-2.5

RAISED PAVEMENT MARKER, (RPM) LOCATION

N.T.S.

DTL-7
DTL-16

COUNTY OF CAPE MAY

CONSTRUCTION DETAILS

SEA ISLE BOULEVARD (C.R. 625)
FROM GARDEN STATE PARKWAY TO
BRIDGE OVER LUDLAM THOROFARE

McCormick Taylor, Inc.
CERTIFICATION OF AUTHORIZATION NO. 24GA28044300
DATE: 9/4/19
ANTHONY M. DIMAGGIO, P.E.
NEW JERSEY PROFESSIONAL ENGINEER LICENSE NO. 24GE04136200

141
170

McCormick Taylor
Engineers & Planners
Since 1946

FILE NAME: X:\5072-01\Sea Isle Blvd\Roadd\construction details\DTL-07-CD-610-2RPM.dgn
PEN TABLE: X:\5072-01\Sea Isle Blvd\Roadd\Construction Details\Const Details.tbl
REV. DATE: 10/14/2013
SCALE: 29.9999 / IN.

STATE	FEDERAL PROJECT NO.
N.J.	STP-0115(104)

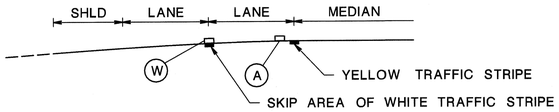

SECTION A–A (TYP.)

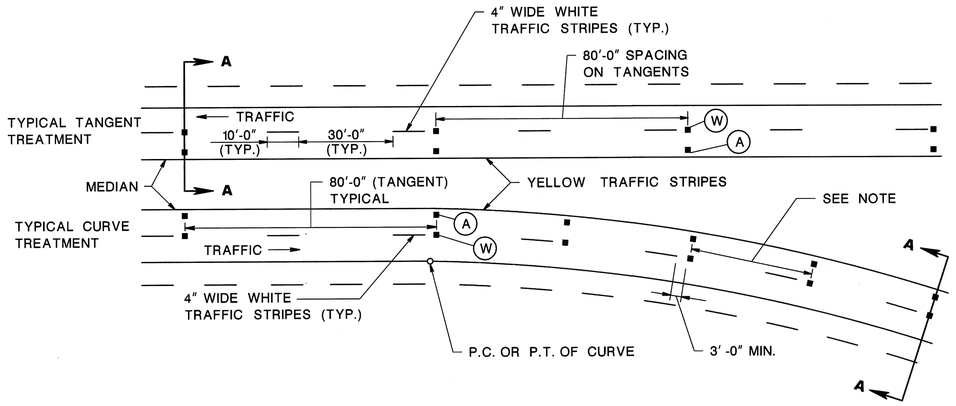

TYPICAL MULTI–LANE DIVIDED SECTION

NOTE:
FOR SPACING ON CURVES SEE CD-610-3.3

CD-610-3.1

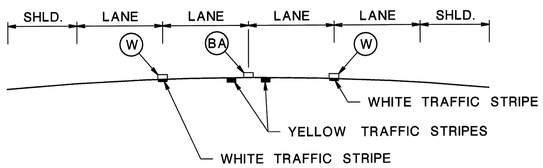

SECTION B–B

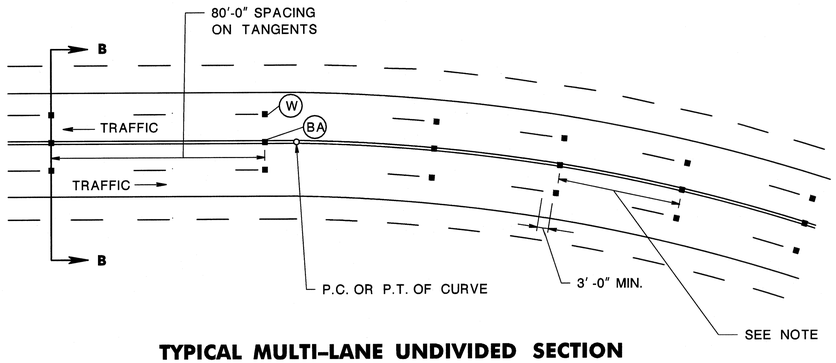

TYPICAL MULTI–LANE UNDIVIDED SECTION

NOTE:
FOR SPACING ON CURVES SEE CD-610-3.3

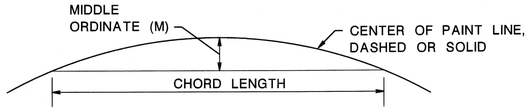

1. USE 200 FOOT TAPE.
2. ESTABLISH 200 FOOT CHORD.
3. MEASURE MIDDLE ORDINATE PERPENDICULAR TO CHORD 100 FOOT FROM EITHER END.
4. DETERMINE SPACING FROM TABLE 1.
5. WHEN DIFFICULT TO DETERMINE MIDDLE ORDINATE, 80 FOOT OR 40 FOOT SPACING WILL BE AS DIRECTED BY THE DEPARTMENT.

TABLE 1

CHORD LENGTH	MIDDLE ORDINATE	RADIUS	REFLECTOR SPACING
200'-0"	M ≥ 2'-7"	R ≤ 1910'	40'-0"
200'-0"	M < 2'-7"	R > 1910'	80'-0"

< LESS THAN
≤ EQUAL TO OR LESS THAN
> GREATER THAN
≥ EQUAL TO OR GREATER THAN

METHOD FOR DETERMINING RPM SPACING ON HORIZONTAL CURVES

CD-610-3.3

LEGEND

(W) RPM, MONO-DIRECTIONAL WHITE LENS

(A) RPM, MONO-DIRECTIONAL AMBER LENS

(BA) RPM, BI-DIRECTIONAL AMBER LENS

CD-610-3.4

RAISED PAVEMENT MARKER, (RPM) LOCATION

N.T.S.

DTL-8
DTL-16

COUNTY OF CAPE MAY

CONSTRUCTION DETAILS

SEA ISLE BOULEVARD (C.R. 625)
FROM GARDEN STATE PARKWAY TO
BRIDGE OVER LUDLAM THOROFARE

McCormick Taylor, Inc.
CERTIFICATION OF AUTHORIZATION NO. 24GA28044300
DATE: 4/4/14
ANTHONY M. DIMAGGIO, P.E.
NEW JERSEY PROFESSIONAL ENGINEER LICENSE NO. 24GE04136200

142
170

McCormick Taylor
Engineers & Planners Since 1946

FILE NAME: x:\5072-01(sea isle blvd)\cadd\construction details\DTL-08-CD-610-3RPM.dgn
PEN TABLE: X:\5072-01(Sea Isle Blvd)\CADD\Construction Details\Constr Details.tbl
REV. DATE: 10/14/2013
SCALE: 29.9999 ' / IN.

STATE	FEDERAL PROJECT NO.
N.J.	STP-0115(104)

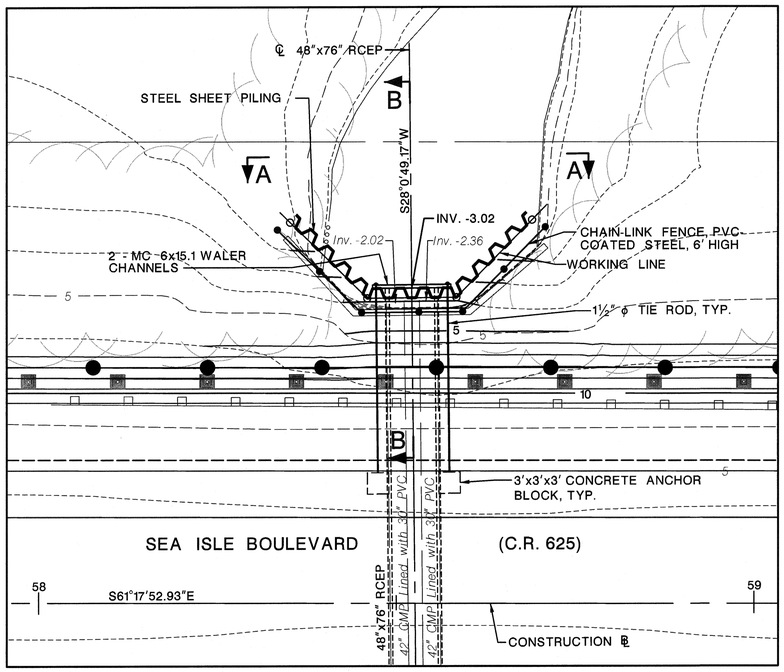

PLAN VIEW

(AT STA. 58+52.64)

SCALE: 1" = 10'

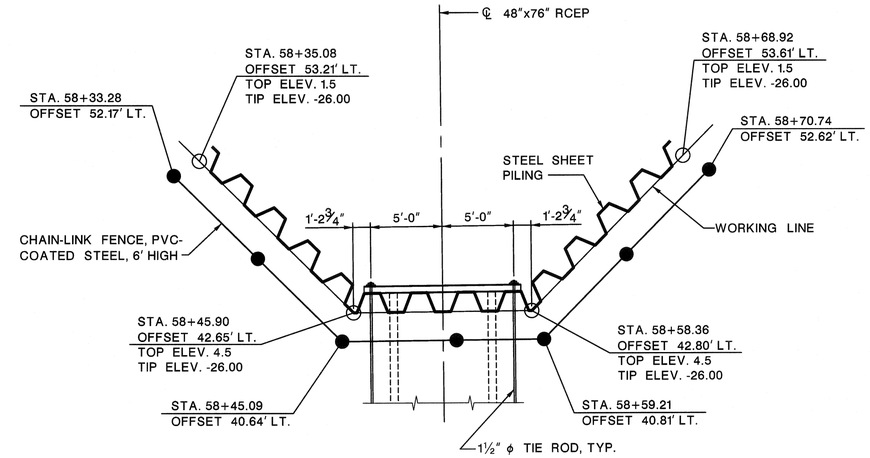

PERMANENT SHEETING AND FENCE LOCATION DETAIL

N.T.S.

NOTES:

1. STEEL SHEET PILE DATA
   (A) MINIMUM SECTION MODULUS REQUIRED = 60.7 in^3/ft.
   (B) STEEL SHEET PILING SHALL CONFORM TO ASTM A572, GRADE 50.
   (C) APPLY COAL TAR EPOXY PAINT (BLACK COLOR) IN ACCORDANCE WITH THE STANDARD SPECIFICATIONS. EXTEND COATING 6" BELOW FINISHED GROUND LINE.
2. COST OF CONCRETE CAP, REINFORCEMENT BARS, WALER CHANNELS, CONCRETE ANCHOR BLOCKS, TIE RODS, BEARING PLATES AND MISCELLANEOUS HARDWARE TO BE INCLUDED UNDER PAY ITEM "STEEL SHEET PILING."
3. FOR CONCRETE CAP DETAILS AND WALER DETAILS, SEE CONSTRUCTION DETAILS SHEET DTL-15.

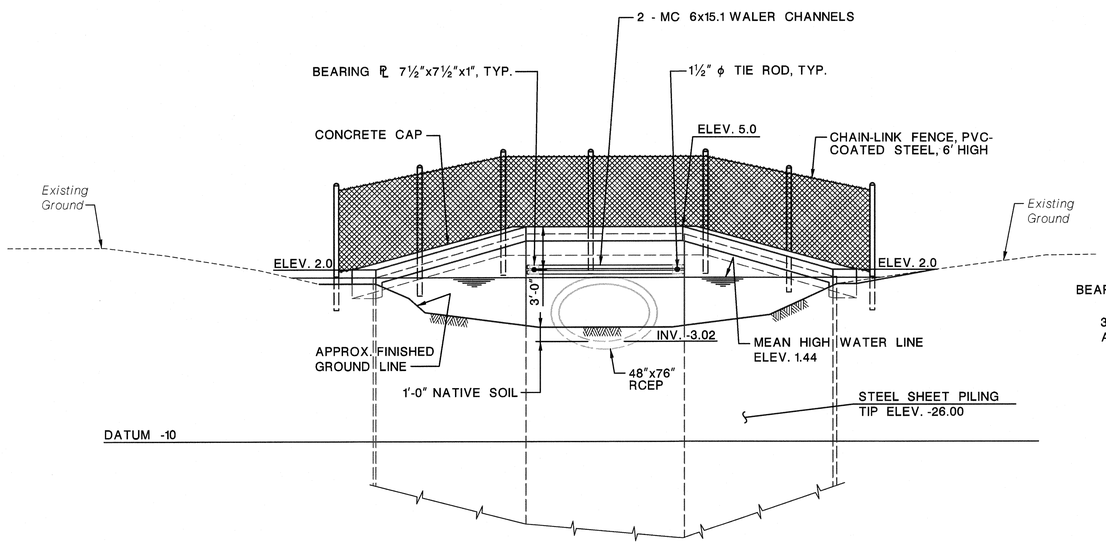

VIEW A-A

N.T.S.

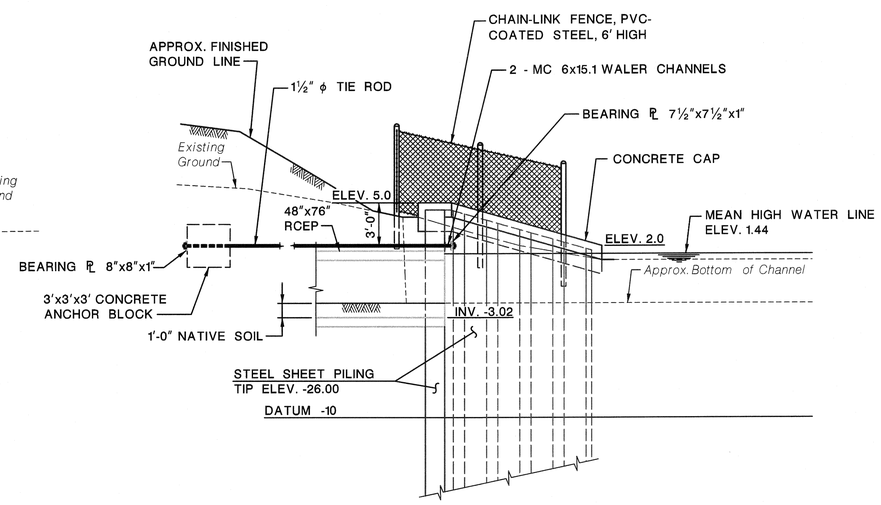

SECTION B-B

N.T.S.

DTL-9
DTL-16

COUNTY OF CAPE MAY

CONSTRUCTION DETAILS

SEA ISLE BOULEVARD (C.R. 625)
FROM GARDEN STATE PARKWAY TO
BRIDGE OVER LUDLAM THOROFARE

McCormick Taylor, Inc.
CERTIFICATION OF AUTHORIZATION NO. 24GA28044300
DATE: 4/4/14
ANTHONY M. DIMAGGIO, P.E.
NEW JERSEY PROFESSIONAL ENGINEER LICENSE NO. 24GE04136200

143
170

McCormick Taylor
Engineers & Planners Since 1948

FILE NAME: x:\50720-01\sea isle blvd\cadd\construction details\DTL-09-CD-Culvert_58-N.dgn
PEN TABLE: X:\50720-01\Sea Isle Blvd\CADD\Construction Details\Const Details.tbl
REV. DATE: 10/14/2013
SCALE: 0.08 / IN.

STATE	FEDERAL PROJECT NO.
N.J.	STP-0115(104)

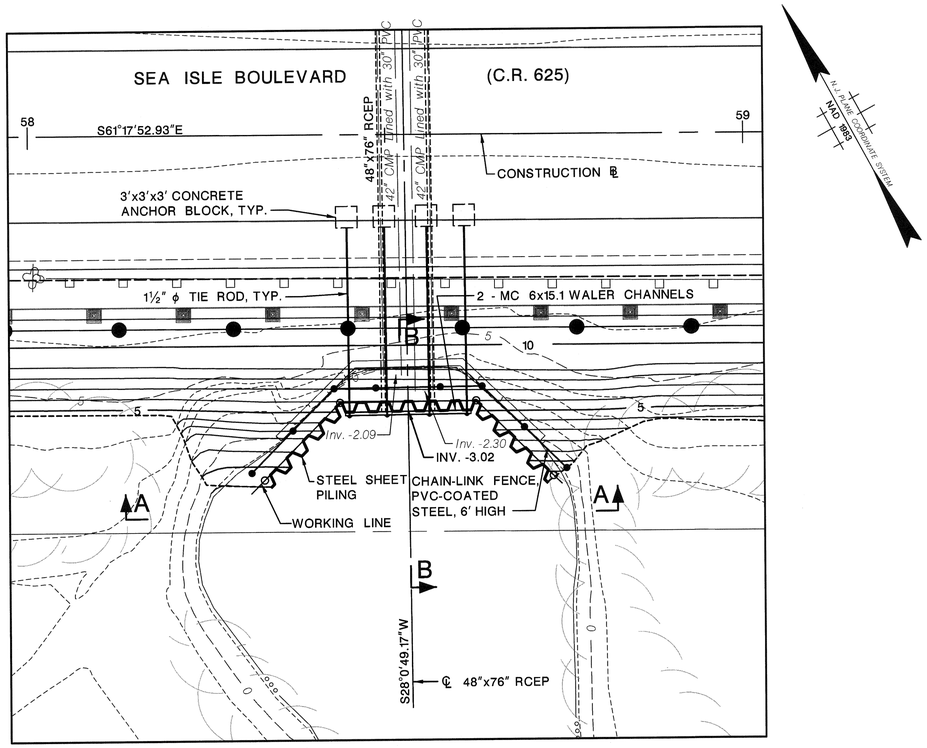

PLAN VIEW

(AT STA. 58+52.64)

SCALE: 1" = 10'

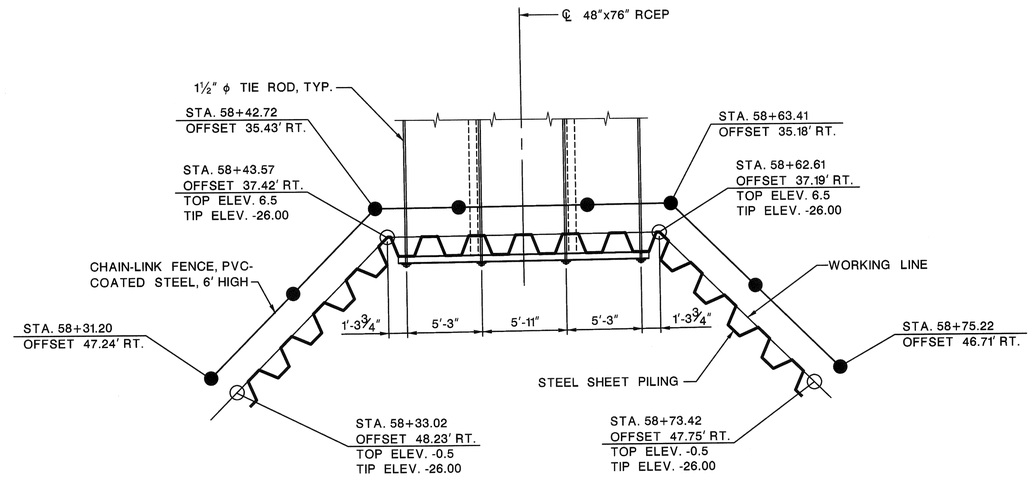

PERMANENT SHEETING AND FENCE LOCATION DETAIL

N.T.S.

NOTES:

1. STEEL SHEET PILE DATA
   (A) MINIMUM SECTION MODULUS REQUIRED = 60.7 in^3/ft.
   (B) STEEL SHEET PILING SHALL CONFORM TO ASTM A572, GRADE 50.
   (C) APPLY COAL TAR EPOXY PAINT (BLACK COLOR) IN ACCORDANCE WITH THE STANDARD SPECIFICATIONS. EXTEND COATING 6" BELOW FINISHED GROUND LINE.
2. COST OF CONCRETE CAP, REINFORCEMENT BARS, WALER CHANNELS, CONCRETE ANCHOR BLOCKS, TIE RODS, BEARING PLATES AND MISCELLANEOUS HARDWARE TO BE INCLUDED UNDER PAY ITEM "STEEL SHEET PILING."
3. FOR CONCRETE CAP DETAILS AND WALER DETAILS, SEE CONSTRUCTION DETAILS SHEET DTL-15.

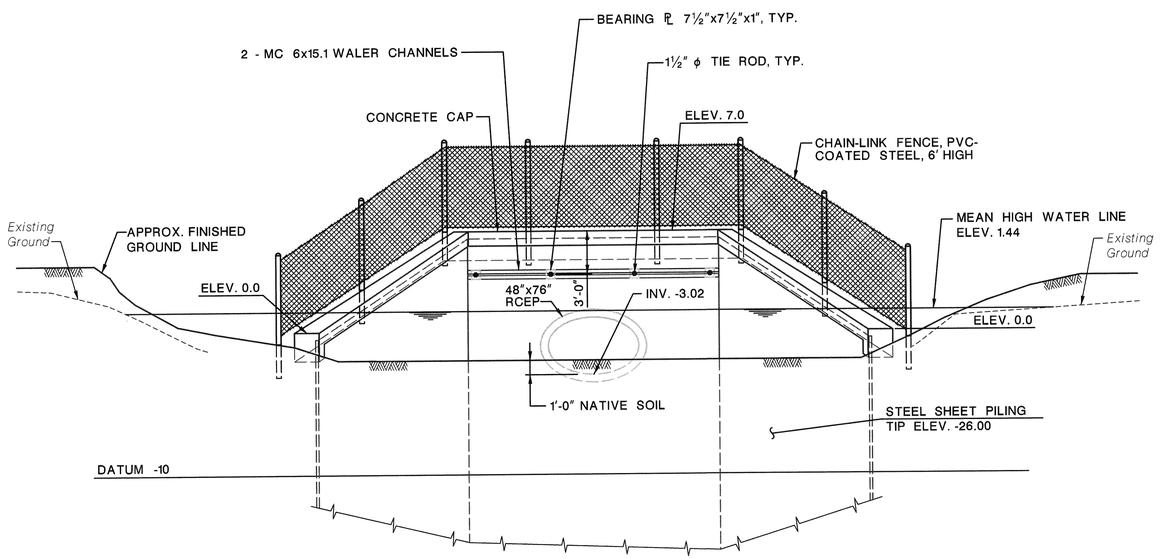

VIEW A-A

N.T.S.

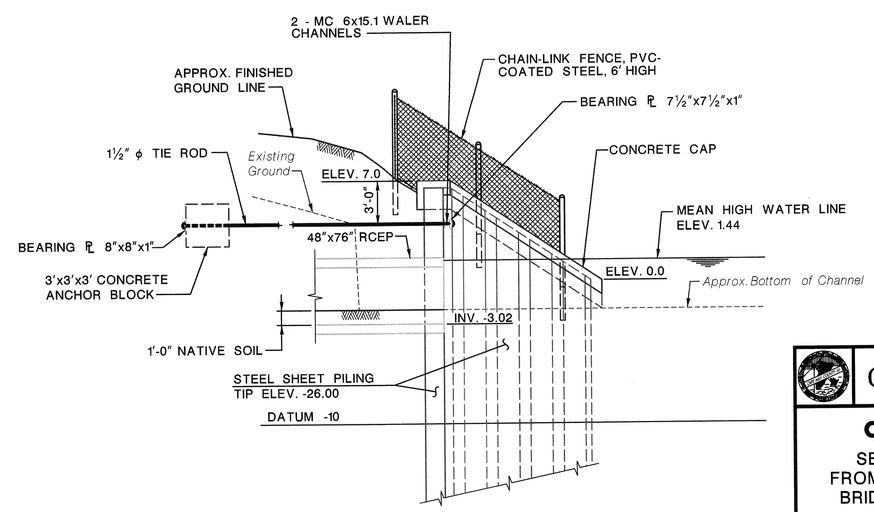

SECTION B-B

N.T.S.

DTL-10
DTL-16

COUNTY OF CAPE MAY

CONSTRUCTION DETAILS

SEA ISLE BOULEVARD (C.R. 625) FROM GARDEN STATE PARKWAY TO BRIDGE OVER LUDLAM THOROFARE

McCormick Taylor, Inc.
CERTIFICATION OF AUTHORIZATION NO. 24GA28044300
DATE: 4/4/14
ANTHONY M. DIMAGGIO, P.E.
NEW JERSEY PROFESSIONAL ENGINEER LICENSE NO. 24GE04136200

144
170

McCormick Taylor
Engineers & Planners Since 1946

FILE NAME: x:\5072-01(sea isle blvd)\cadd\construction details\DTL-10-CD-Culvert_58-S.dgn
PEN TABLE: X:\5072-01(Sea Isle Blvd)\CADD\Construction Details\Const Details.tbl
REV. DATE: 10/14/2013
SCALE: 0.08 ' / IN.

STATE	FEDERAL PROJECT NO.
N.J.	STP-0115(104)

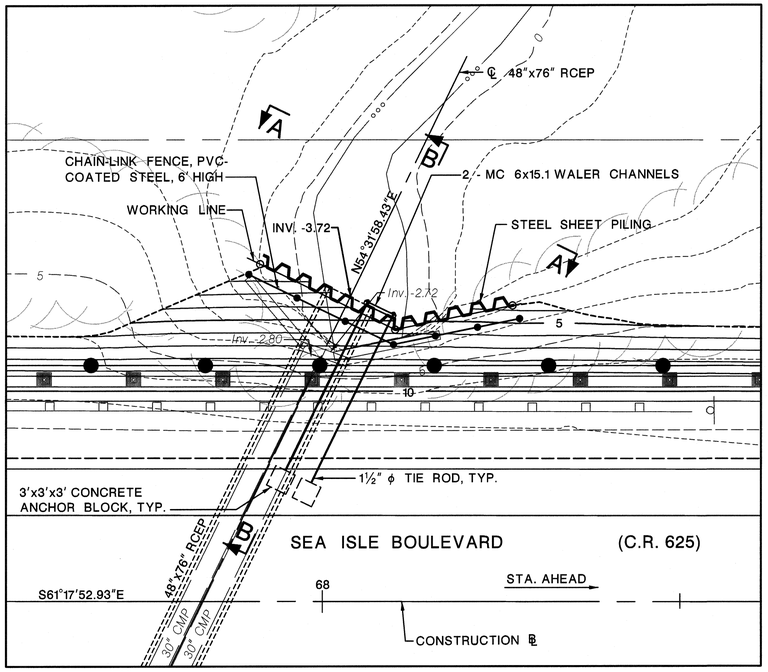

PLAN VIEW

(AT STA. 67+83.19)

SCALE: 1" = 10'

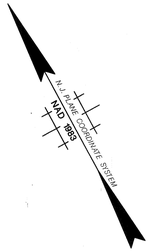

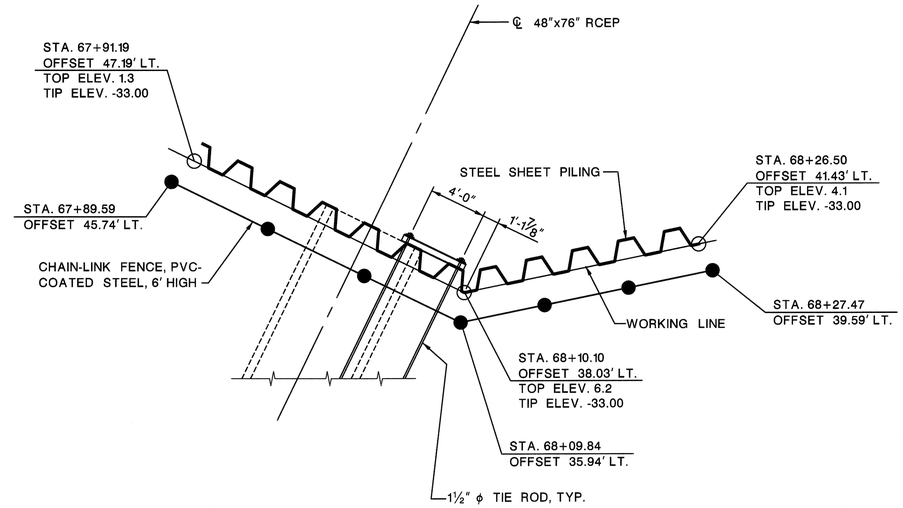

PERMANENT SHEETING AND FENCE LOCATION DETAIL

N.T.S.

NOTES:

1. STEEL SHEET PILE DATA
   (A) MINIMUM SECTION MODULUS REQUIRED = 60.7 in^3/ft.
   (B) STEEL SHEET PILING SHALL CONFORM TO ASTM A572, GRADE 50.
   (C) APPLY COAL TAR EPOXY PAINT (BLACK COLOR) IN ACCORDANCE WITH THE STANDARD SPECIFICATIONS. EXTEND COATING 6" BELOW FINISHED GROUND LINE.
2. COST OF CONCRETE CAP, REINFORCEMENT BARS, WALER CHANNELS, CONCRETE ANCHOR BLOCKS, TIE RODS, BEARING PLATES AND MISCELLANEOUS HARDWARE TO BE INCLUDED UNDER PAY ITEM "STEEL SHEET PILING."
3. FOR CONCRETE CAP DETAILS AND WALER DETAILS, SEE CONSTRUCTION DETAILS SHEET DTL-15.

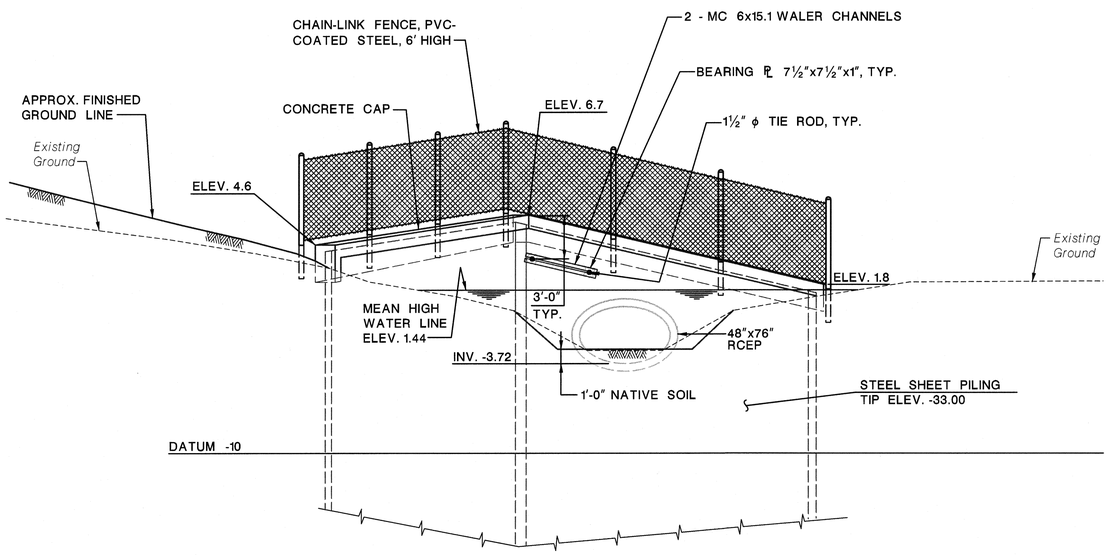

VIEW A-A

N.T.S.

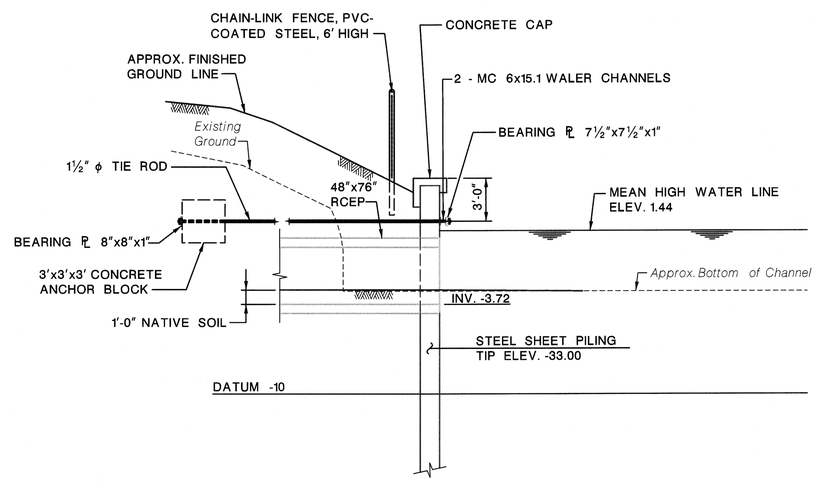

SECTION B-B

N.T.S.

DTL-11
DTL-16

COUNTY OF CAPE MAY

CONSTRUCTION DETAILS

SEA ISLE BOULEVARD (C.R. 625)
FROM GARDEN STATE PARKWAY TO
BRIDGE OVER LUDLAM THOROFARE

McCormick Taylor, Inc.
CERTIFICATION OF AUTHORIZATION NO. 24GA28044300
DATE: 4/4/14
ANTHONY M. DIMAGGIO, P.E.
NEW JERSEY PROFESSIONAL ENGINEER LICENSE NO. 24GE04136200

McCormick Taylor
Engineers & Planners Since 1946

FILE NAME: x:\5072-01\(sea isle blvd)\cadd\construction details\DTL-11-CD-Culvert_68-N.dgn
PEN TABLE: X:\5072-01\(Sea Isle Blvd)\CADD\Construction Details\Constr Details.tbl
REV. DATE: 10/14/2013
SCALE: 0.08 ' / IN.

STATE	FEDERAL PROJECT NO.
N.J.	STP-0115(104)

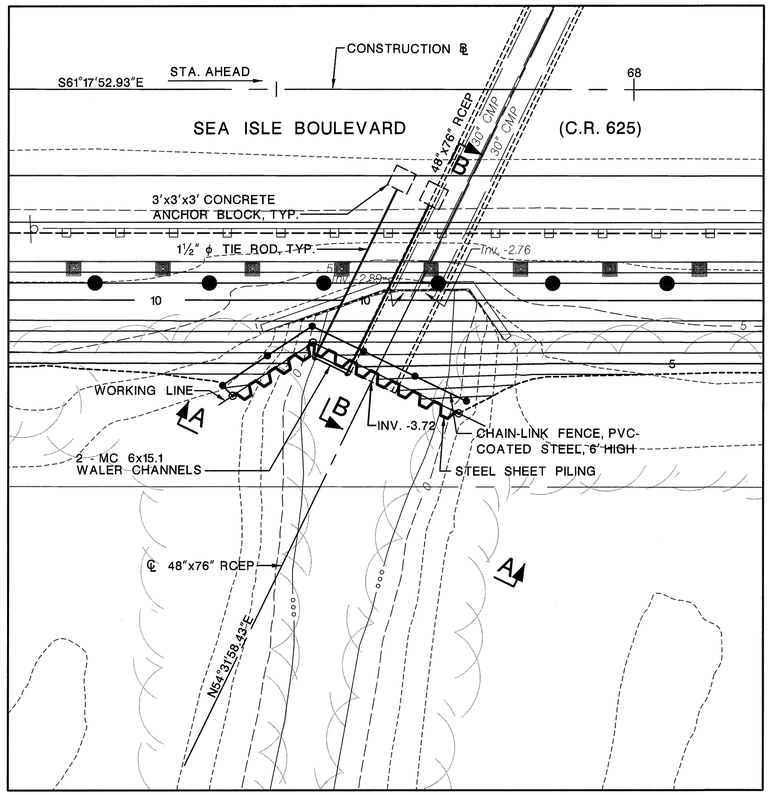

PLAN VIEW

(AT STA. 67+83.19)

SCALE: 1" = 10'

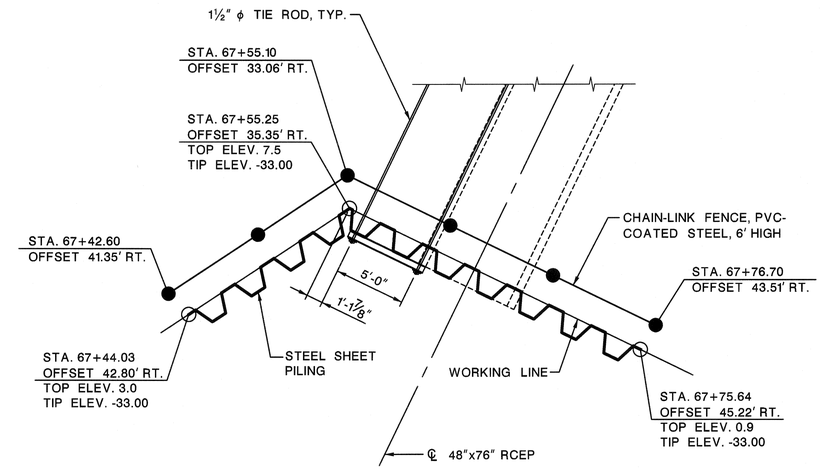

PERMANENT SHEETING AND FENCE LOCATION DETAIL

N.T.S.

NOTES:

1. STEEL SHEET PILE DATA
   (A) MINIMUM SECTION MODULUS REQUIRED = 60.7 in^3/ft.
   (B) STEEL SHEET PILING SHALL CONFORM TO ASTM A572, GRADE 50.
   (C) APPLY COAL TAR EPOXY PAINT (BLACK COLOR) IN ACCORDANCE WITH THE STANDARD SPECIFICATIONS. EXTEND COATING 6" BELOW FINISHED GROUND LINE.
2. COST OF CONCRETE CAP, REINFORCEMENT BARS, WALER CHANNELS, CONCRETE ANCHOR BLOCKS, TIE RODS, BEARING PLATES AND MISCELLANEOUS HARDWARE TO BE INCLUDED UNDER PAY ITEM "STEEL SHEET PILING."
3. FOR CONCRETE CAP DETAILS AND WALER DETAILS, SEE CONSTRUCTION DETAILS SHEET DTL-15.

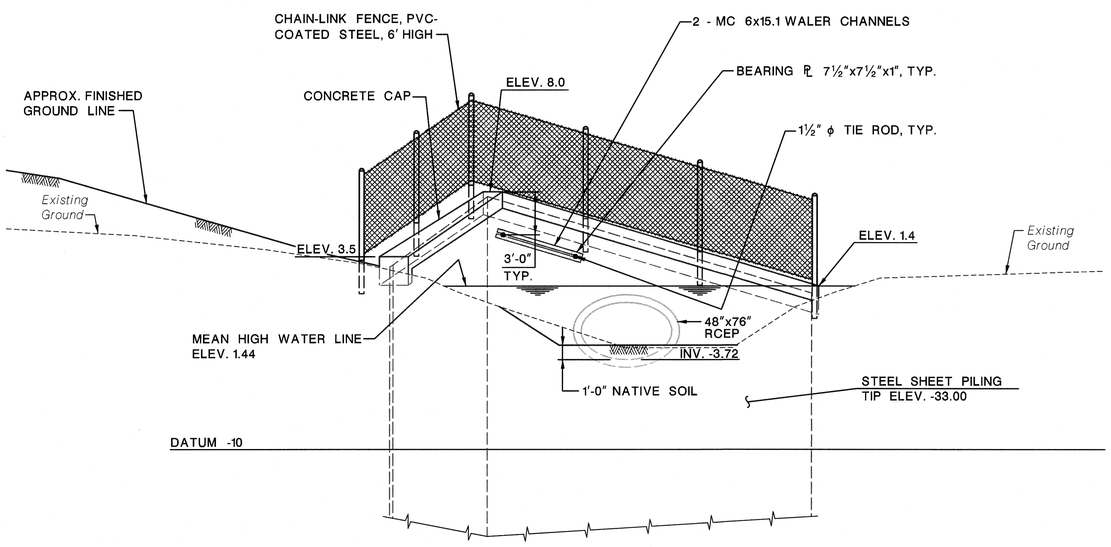

VIEW A-A

N.T.S.

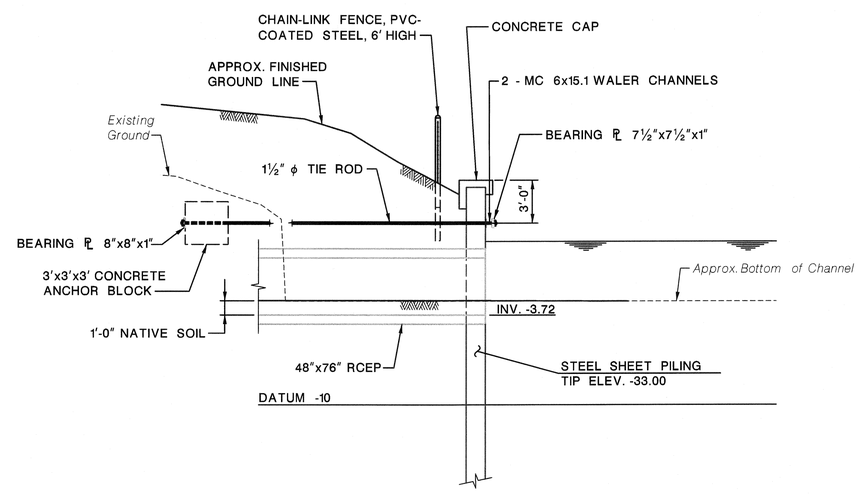

SECTION B-B

N.T.S.

DTL-12
DTL-16

COUNTY OF CAPE MAY

CONSTRUCTION DETAILS

SEA ISLE BOULEVARD (C.R. 625)
FROM GARDEN STATE PARKWAY TO
BRIDGE OVER LUDLAM THOROFARE

McCormick Taylor, Inc.
CERTIFICATION OF AUTHORIZATION NO. 24GA28044300
DATE: 4/9/19
ANTHONY M. DIMAGGIO, P.E.
NEW JERSEY PROFESSIONAL ENGINEER LICENSE NO. 24GE04136200

146
170

McCormick Taylor
Engineers & Planners Since 1946

FILE NAME: x:\5072-01\sea isle blvd\cadd\construction details\DTL-12-CD-Culvert_68-S.dgn
PEN TABLE: X:\5072-01\Sea Isle Blvd\CADD\Construction Details\Const Details.tbl
REV DATE: 06/04/2019
SCALE: 0.08 / IN.

STATE	FEDERAL PROJECT NO.
N.J.	STP-0115(104)

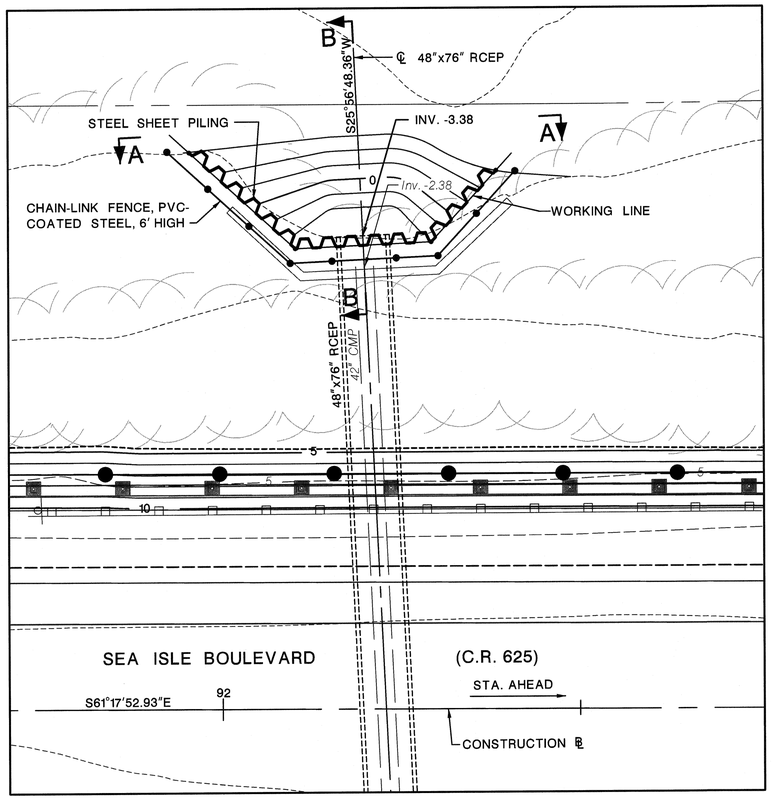

PLAN VIEW

(AT STA. 92+22.82)
SCALE: 1" = 10'

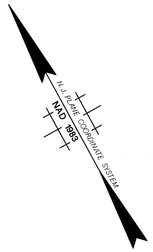

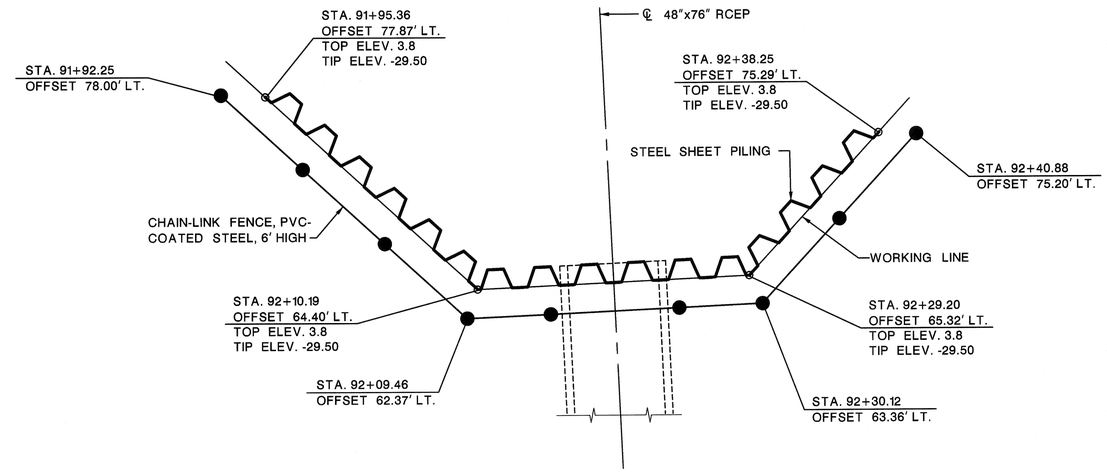

PERMANENT SHEETING AND FENCE LOCATION DETAIL

N.T.S.

NOTES:

1. STEEL SHEET PILE DATA
   (A) MINIMUM SECTION MODULUS REQUIRED = 60.7 in^3/ft.
   (B) STEEL SHEET PILING SHALL CONFORM TO ASTM A572, GRADE 50.
   (C) APPLY COAL TAR EPOXY PAINT (BLACK COLOR) IN ACCORDANCE WITH THE STANDARD SPECIFICATIONS. EXTEND COATING 6" BELOW FINISHED GROUND LINE.
2. COST OF CONCRETE CAP AND REINFORCEMENT BARS TO BE INCLUDED UNDER PAY ITEM "STEEL SHEET PILING."
3. FOR CONCRETE CAP DETAILS, SEE CONSTRUCTION DETAILS SHEET DTL-15.

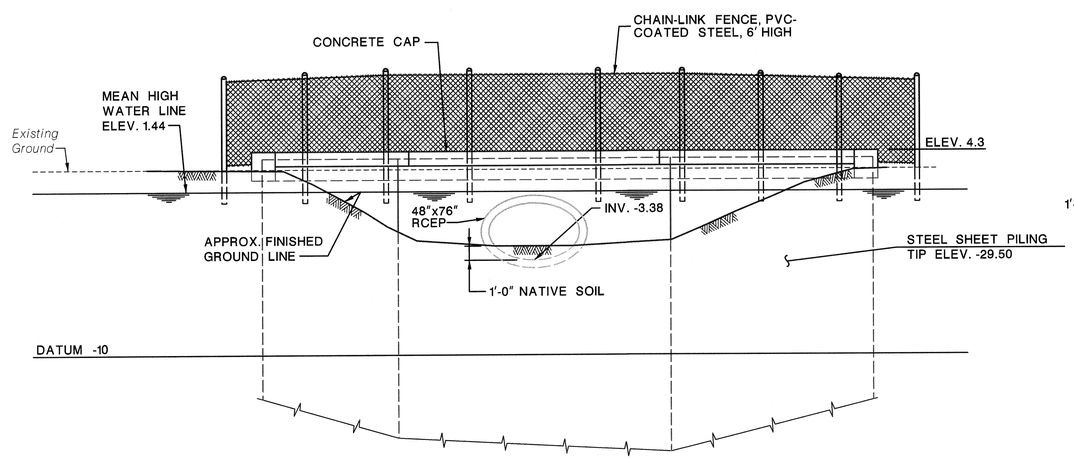

VIEW A-A

N.T.S.

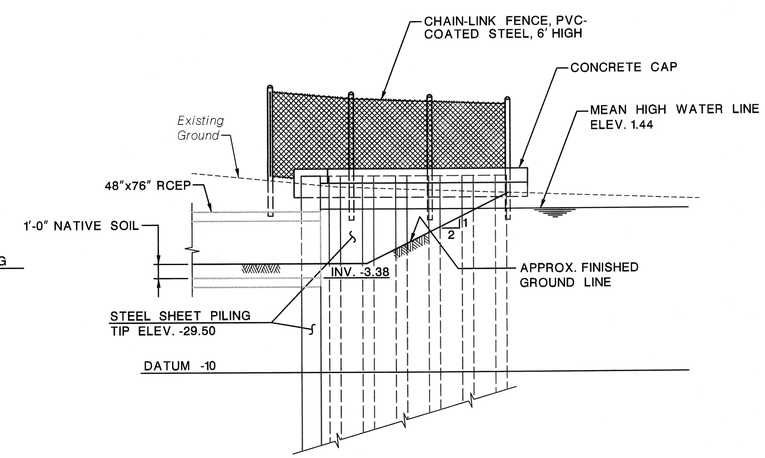

SECTION B-B

N.T.S.

McCormick Taylor
Engineers & Planners Since 1946

FILE NAME: x:\5072-01(sea isle blvd)\cadd\construction details\DTL-13-CD-Culvert_92-N.dgn
PEN TABLE: X:\5072-01(Sea Isle Blvd)\CADD\Construction Details\Constr Details.tbl
REV. DATE: 10/14/2013
SCALE: 0:1 "=1" IN.

DTL-13
DTL-16

COUNTY OF CAPE MAY

CONSTRUCTION DETAILS

SEA ISLE BOULEVARD (C.R. 625)
FROM GARDEN STATE PARKWAY TO
BRIDGE OVER LUDLAM THOROFARE

McCormick Taylor, Inc.
CERTIFICATION OF AUTHORIZATION NO. 24GA28044300
DATE: 4/4/14
ANTHONY M. DIMAGGIO, P.E.
NEW JERSEY PROFESSIONAL ENGINEER LICENSE NO. 24GE04136200

147
170

STATE	FEDERAL PROJECT NO.
N.J.	STP-0115(104)

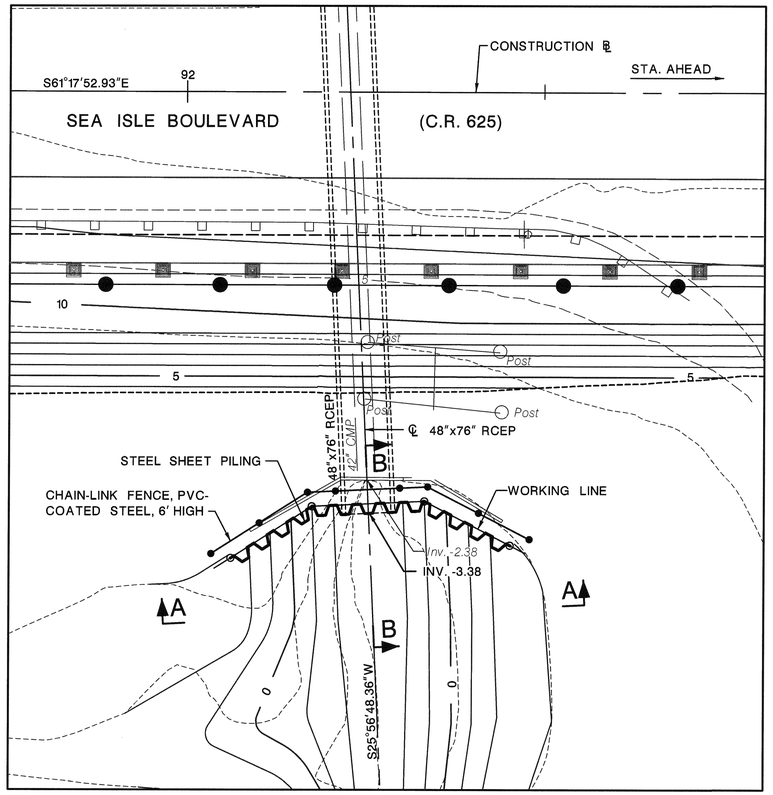

PLAN VIEW

(AT STA. 92+22.82)

SCALE: 1" = 10'

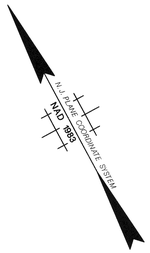

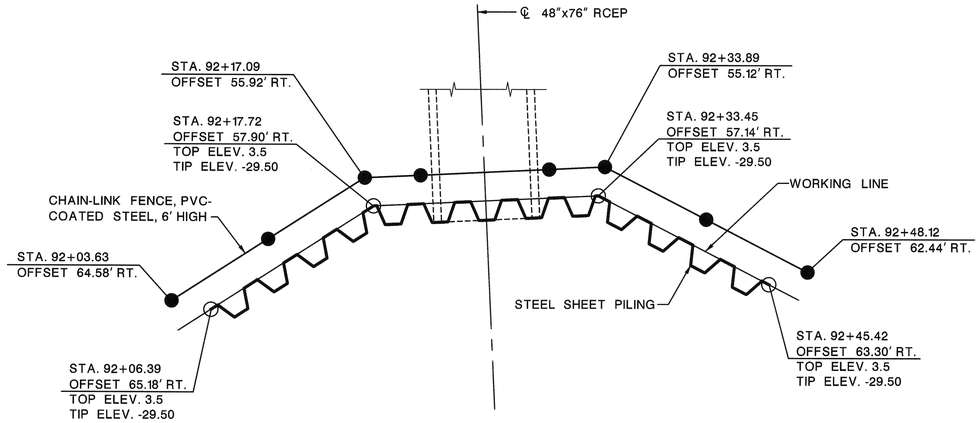

PERMANENT SHEETING AND FENCE LOCATION DETAIL

N.T.S.

NOTES:

1. STEEL SHEET PILE DATA
   (A) MINIMUM SECTION MODULUS REQUIRED = 60.7 in^3/ft.
   (B) STEEL SHEET PILING SHALL CONFORM TO ASTM A572, GRADE 50.
   (C) APPLY COAL TAR EPOXY PAINT (BLACK COLOR) IN ACCORDANCE WITH THE STANDARD SPECIFICATIONS. EXTEND COATING 6" BELOW FINISHED GROUND LINE.
2. COST OF CONCRETE CAP AND REINFORCEMENT BARS TO BE INCLUDED UNDER PAY ITEM "STEEL SHEET PILING."
3. FOR CONCRETE CAP DETAILS, SEE CONSTRUCTION DETAILS SHEET DTL-15.

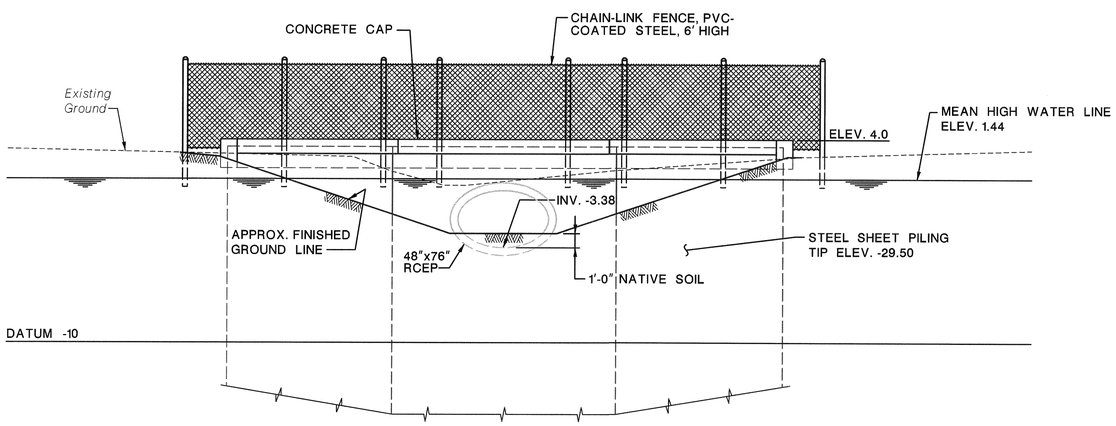

VIEW A-A

N.T.S.

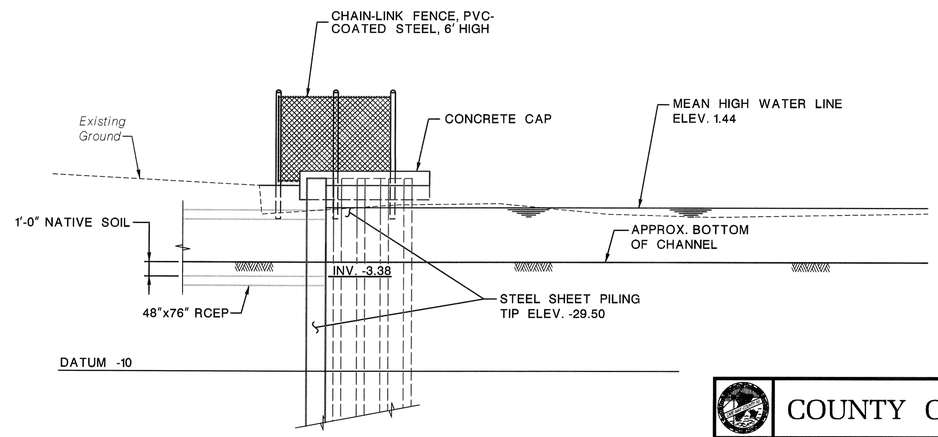

SECTION B-B

N.T.S.

DTL-14
DTL-16

COUNTY OF CAPE MAY

CONSTRUCTION DETAILS

SEA ISLE BOULEVARD (C.R. 625)
FROM GARDEN STATE PARKWAY TO
BRIDGE OVER LUDLAM THOROFARE

McCormick Taylor, Inc.
CERTIFICATION OF AUTHORIZATION NO. 24GA28044300
DATE: 4/4/14
ANTHONY M. DIMAGGIO, P.E.
NEW JERSEY PROFESSIONAL ENGINEER LICENSE NO. 24GE04136200

148
170

McCormick Taylor
Engineers & Planners Since 1946

FILE NAME: x:\5072-01\sea isle blvd\cadd\construction details\DTL-14-CD-Culvert_92-S.dgn
PEN TABLE: X:\5072-01\Sea Isle Blvd\CADD\Construction Details\Constr Details.tbl
REV. DATE: 10/14/2013
SCALE: 0.08 ' / IN.

STATE	FEDERAL PROJECT NO.
N.J.	STP-0115(104)

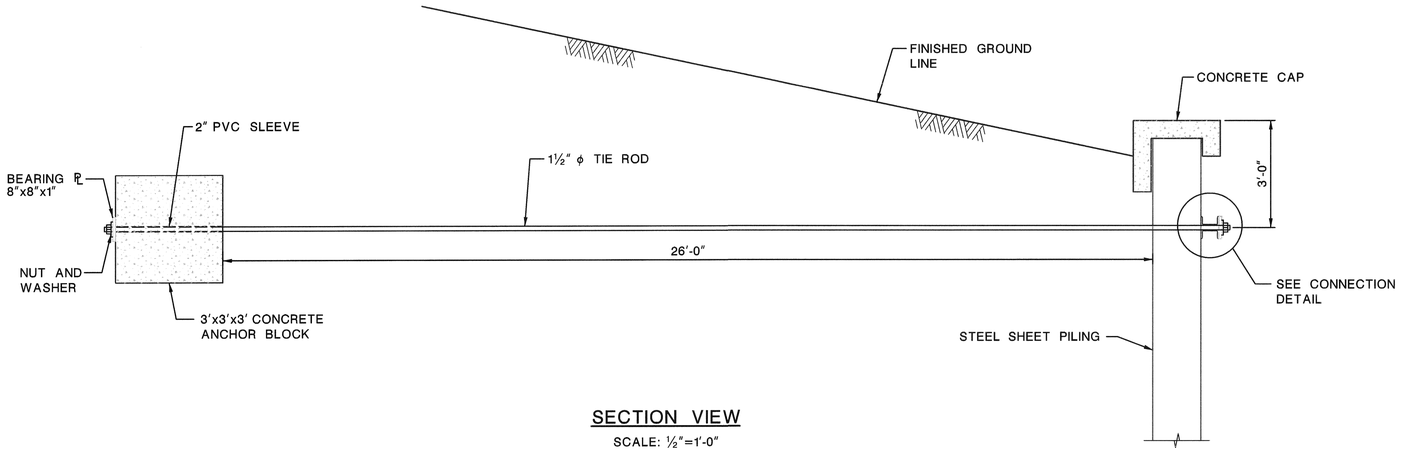

SECTION VIEW

SCALE: ½"=1'-0"

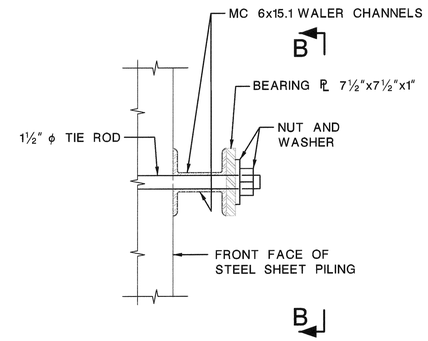

CONNECTION DETAIL

SCALE: 1 ½"=1'-0"

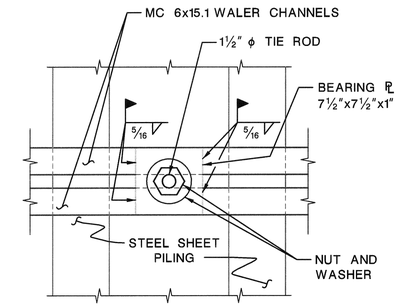

VIEW B-B

SCALE: 1 ½"=1'-0"

WALER DETAILS

SCALE AS NOTED

NOTES:

1. CONCRETE CAPS AND ANCHOR BLOCKS SHALL BE CLASS "B" CONCRETE.
2. REINFORCEMENT BARS SHALL CONFORM TO ASTM A615, GRADE 60. REINFORCEMENT BARS SHALL BE EPOXY COATED IN ACCORDANCE WITH ASTM A775.
3. THE CONTRACTOR SHALL SUBMIT SHOP DRAWINGS FOR REINFORCEMENT BAR DETAILS PRIOR TO START OF CONCRETE CAP CONSTRUCTION.
4. WALER CHANNELS, TIE RODS, AND BEARING PLATES SHALL CONFORM TO ASTM A709, GRADE 50.
5. NUTS AND WASHERS FOR TIE RODS SHALL CONFORM TO ASTM A563 AND ASTM F436, RESPECTIVELY.
6. HOT-DIP GALVANIZE STRUCTURAL STEEL AND MISCELLANEOUS HARDWARE IN ACCORDANCE WITH THE STANDARD SPECIFICATIONS.

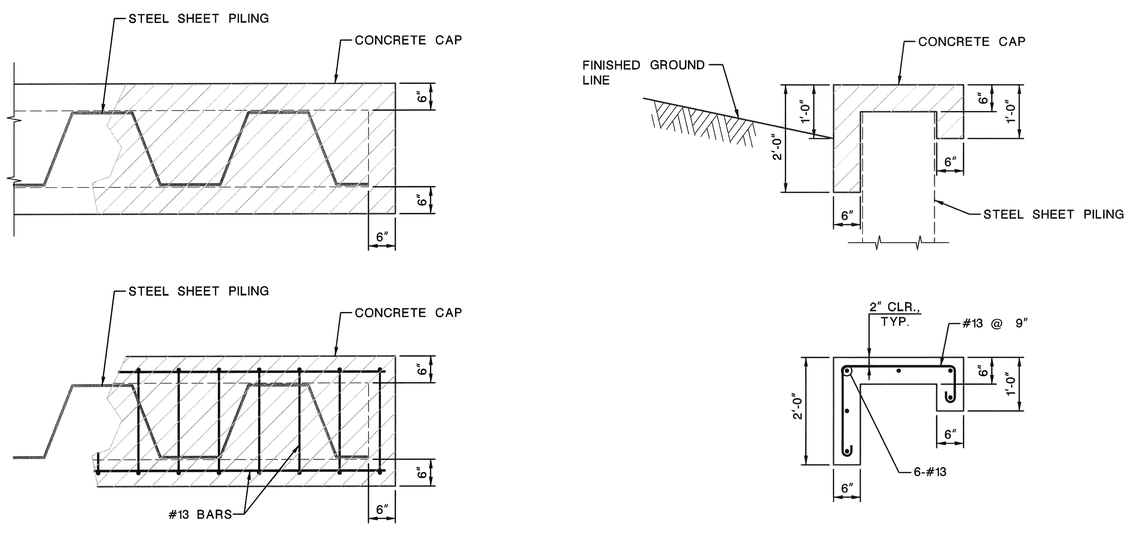

CONCRETE CAP DETAILS

SCALE: ¾"=1'-0"

1' 6" 0 1' 2' 3' 4'
½" = 1' - 0"

1' 6" 0 1' 2'
¾" = 1' - 0"

1' 9" 6" 3" 0 1'
1½" = 1' - 0"

DTL-15
DTL-16

COUNTY OF CAPE MAY

CONSTRUCTION DETAILS

SEA ISLE BOULEVARD (C.R. 625)
FROM GARDEN STATE PARKWAY TO
BRIDGE OVER LUDLAM THOROFARE

McCormick Taylor, Inc.
CERTIFICATION OF AUTHORIZATION NO. 24GA28044300
DATE: 4/9/14
ANTHONY M. DIMAGGIO, P.E.
NEW JERSEY PROFESSIONAL ENGINEER LICENSE NO. 24GE04136200

149
170

McCormick Taylor
Engineers & Planners
Since 1946

FILE NAME: x:\5072-01\sea isle blvd\cadd\construction details\DTL-15-CD-CulvertDetails.dgn
PEN TABLE: X:\5072-01\Sea Isle Blvd\CADD\Construction Details\Consar Details.tbl
REV. DATE: 10/14/2013
SCALE: 0:1 1:1 IN.

STATE	FEDERAL PROJECT NO.
N.J.	STP-0115(104)

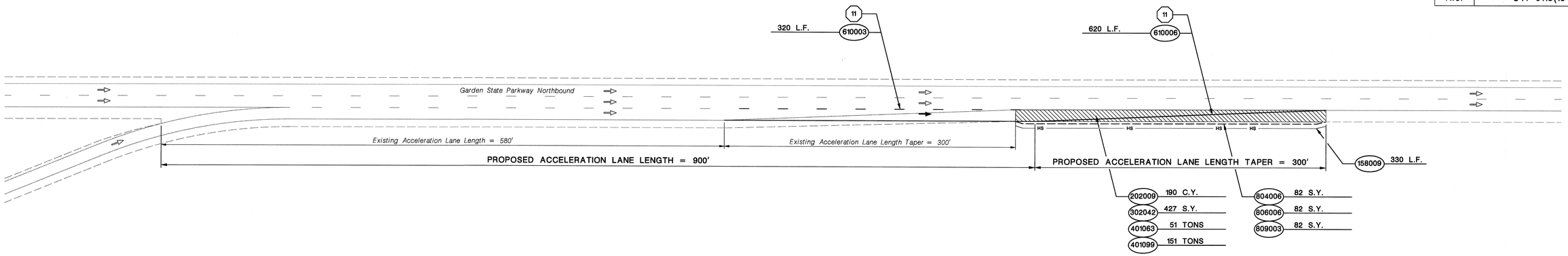

PLAN VIEW – GARDEN STATE PARKWAY NORTHBOUND ACCELERATION LANE EXTENSION

N.T.S.

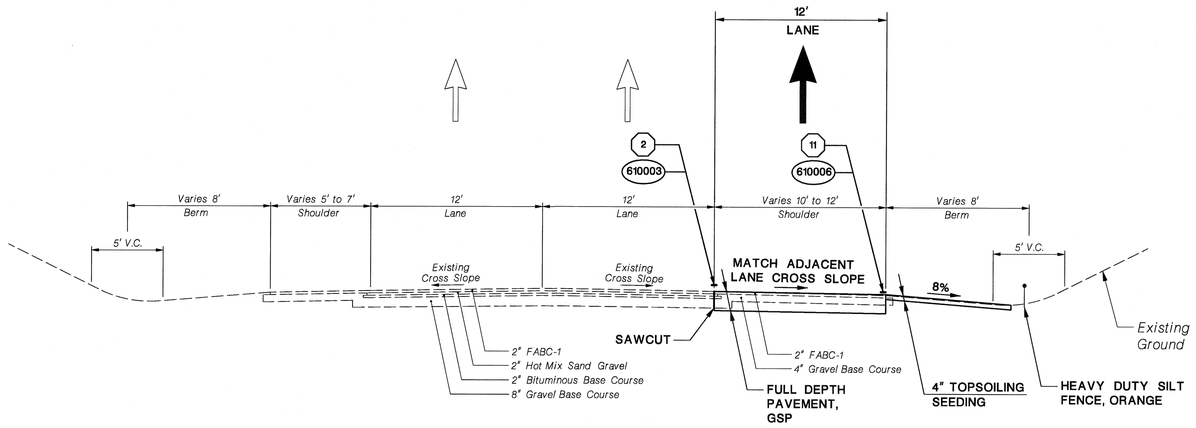

TYPICAL SECTION – GARDEN STATE PARKWAY NORTHBOUND ACCELERATION LANE EXTENSION

N.T.S.

ITEM NO.	TO BE CONSTRUCTED	CONTRACT QUANTITY	AS-BUILT QUANTITY
158009M	HEAVY DUTY SILT FENCE, ORANGE	330 L.F.	
159026M	MAINTENANCE & PROTECTION OF TRAFFIC - GARDEN STATE PARKWAY	LUMP SUM	
202009P	EXCAVATION, UNCLASSIFIED	190 C.Y.	
302042P	DENSE-GRADED AGGREGATE BASE COURSE, 8" THICK	427 S.Y.	
401063M	HOT MIX ASPHALT 12.5H76 SURFACE COURSE	51 TONS	
401099M	HOT MIX ASPHALT 25M64 BASE COURSE	151 TONS	
610003M	TRAFFIC STRIPES, LONG LIFE, EPOXY RESIN, 4"	320 L.F.	
610006M	TRAFFIC STRIPES, LONG LIFE, EPOXY RESIN, 6"	620 L.F.	
804006P	TOPSOILING, 4" THICK	82 S.Y.	
806006P	FERTILIZING AND SEEDING, TYPE A-3	82 S.Y.	
809003M	STRAW MULCHING	82 S.Y.	

STRIPING LEGEND

- (2) 4" WIDE DASHED WHITE LINE
- (11) 6" WIDE SOLID WHITE LINE

GENERAL NOTES:

1. THE CONTRACTOR IS REQUIRED TO COORDINATE WITH NJTA (NEW JERSEY TURNPIKE AUTHORITY) AND SEEK APPROVAL FOR ALL WORK THAT IS NEEDED TO BE PERFORMED WITHIN THE JURISDICTION OF THE NJTA.
2. THE CONTRACTOR SHALL FOLLOW ALL NJTA STANDARDS AND TRAFFIC CONTROL STANDARDS.
3. THE CONTRACTOR SHALL APPLY FOR A NJTA TRAFFIC PERMIT AT LEAST TEN (10) WORKING DAYS PRIOR TO THE TIME THE CONTRACTOR INTENDS TO START ANY OPERATIONS AT THE PROJECT SITE.

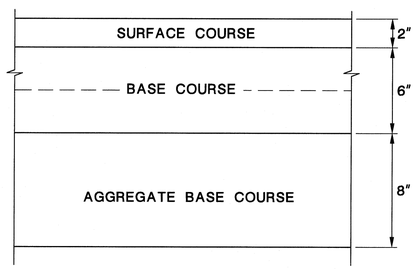

FULL DEPTH PAVEMENT, GSP

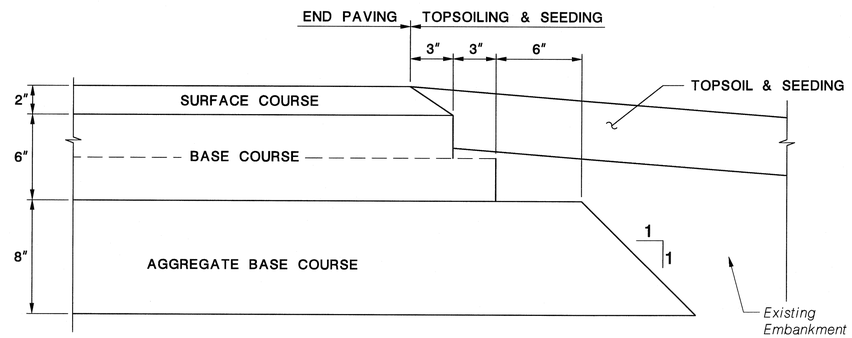

TRANSVERSE PAVEMENT STEPPING DETAIL – NO CURB

FOR FULL DEPTH PAVEMENT, GSP

DTL-16
DTL-16

COUNTY OF CAPE MAY

CONSTRUCTION DETAIL

SEA ISLE BOULEVARD (C.R. 625)
FROM GARDEN STATE PARKWAY TO
BRIDGE OVER LUDLAM THOROFARE

McCormick Taylor, Inc.
CERTIFICATION OF AUTHORIZATION NO. 24GA28044300
DATE: 4/11/14
ANTHONY M. DIMAGGIO, P.E.
NEW JERSEY PROFESSIONAL ENGINEER LICENSE NO. 24GE04136200

150
170

McCormick Taylor
Engineers & Planners
Since 1946

FILE NAME: X:\5072-01(Sea Isle Blvd)\CADD\Construction Details\DTL-16-CD-GSP.dgn
PROJECT TITLE: X:\5072-01(Sea Isle Blvd)\CADD\Construction Details\Conser Details.bl
REV DATE: 12/18/2013
SCALE: 5.0000' / IN.

STATE	FEDERAL PROJECT NO.
N.J.	STP-0115(104)

DENNIS TOWNSHIP

COUNTY OF CAPE MAY

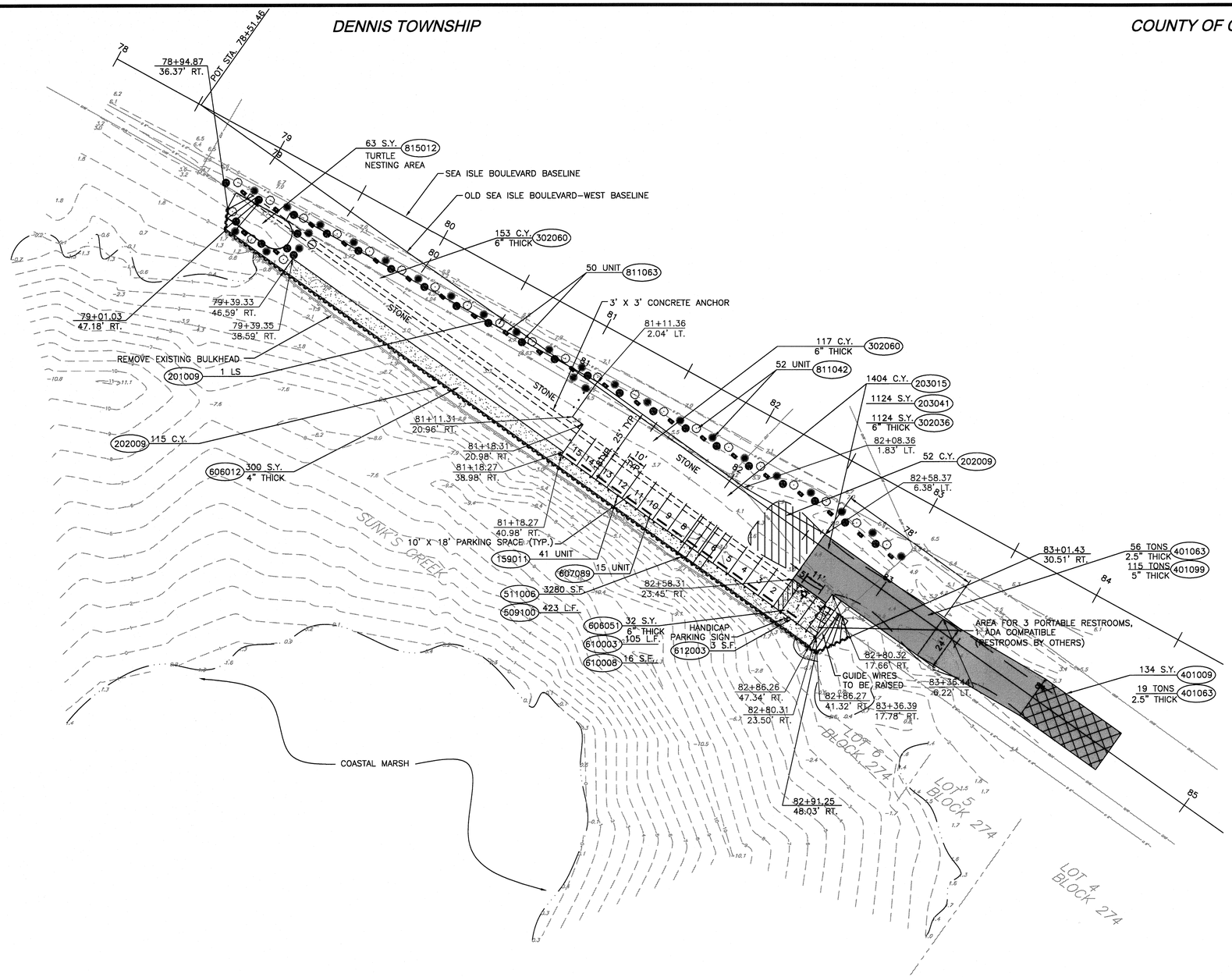

SITE PLAN

30' 20' 10' 0 30' 60'

SCALE: 1"=30'

GENERAL NOTES:

1. VERTICAL CONTROL BASED ON N.A.V.D. 1988, HORIZONTAL DATUM N.A.D. 1983.
2. EXISTING SPOT ELEVATIONS BASED ON FIELD CONDITIONS AS OF MARCH 08, 2007.
3. STATIONS AND OFFSET TO OLD SEA ISLE BOULEVARD-WEST BASELINE.
4. STEEL SHEET PILE DATA
   (A) MINIMUM SECTION MODULUS REQUIRED = 60.7 IN^3/FT.
   (B) STEEL SHEET PILING SHALL CONFORM TO ASTM A572, GRADE 50.
   (C) APPLY COAL TAR PAINT (BLACK COLOR) IN ACCORDANCE WITH THE STANDARDSPECIFICATIONS. EXTEND COATING 6" BELOW FINISH GRADE LINE.

LEGEND:

- 4" BOLLARD
- PROPOSED GRADE
- 3.6 EXISTING SPOT ELEVATION
- EXISTING CONTOUR
- EXISTING TOP OF CHANNEL BANK
- PROPOSED ASPHALT
- EDGE OF EXISTING ASPHALT
- BULKHEAD

ITEM NO.	TO BE CONSTRUCTED	CONTRACT QUANTITY	AS-BUILT QUANTITY
159011M	BOLLARD	41 UNIT	
201009P	CLEARING SITE STRUCTURE, (BULKHEAD)	1 L.S.	
202009P	EXCAVATION, UNCLASSIFIED	167 C.Y.	
203015P	I-11 SOIL AGGREGATE	1404 C.Y.	
203041P	GEOTEXTILE, ROADWAY STABILIZATION	1124 S.Y.	
302036P	DENSE-GRADED AGGREGATE BASE COURSE, 6" THICK	1124 S.Y.	
302060P	COURSE AGGREGATE, SIZE No. 57	270 C.Y.	
401009P	HMA MILLING, 3" OR LESS	134 S.Y.	
401063M	HOT MIX ASPHALT 12.5 H 76 SURFACE COURSE	75 TONS	
401099M	HOT MIX ASPHALT 25 M 64 BASE COURSE	115 TONS	
511006P	STEEL SHEET PILING	3280 S.F.	
509100P	ORNAMENTAL RAILING	423 L.F.	
606012P	CONCRETE SIDEWALK, 4" THICK	300 S.Y.	
606051P	CONCRETE DRIVEWAY, 6" THICK	32 S.Y.	
607089M	PRECAST CONCRETE WHEEL STOP	15 UNIT	
610003M	TRAFFIC STRIPES, LONG LIFE, EPOXY RESIN, 4"	105 L.F.	
610008M	TRAFFIC MARKINGS, SYMBOLS, LONG LIFE, THERMOPLASTIC	16 S.F.	
612003P	REGULATORY AND WARNING SIGN	3 S.F.	
811042M	EVERGREEN TREES, 5'-6' HIGH, B & B	52 UNIT	
811063M	DECIDUOUS SHRUB, 18"-24" HIGH, #3 CONTAINER	50 UNIT	
815012M	TURTLE NESTING AREA	63 S.Y.	

GIBSON ASSOCIATES, P.A.
CONSULTING ENGINEERS AND SURVEYORS
522 SEA ISLE BOULEVARD
OCEAN VIEW, NEW JERSEY 08230
(609) 624-1944

McCormick Taylor
Engineers & Planners Since 1945

S-1 / S-4

COUNTY OF CAPE MAY

SITE PLANS

SUNK'S CREEK RECREATIONAL AREA SITE PLAN

Gibson Associates, P.A.

DATE: 4/8/11

WALTER E. SURRAN, JR., P.E.

NEW JERSEY PROFESSIONAL ENGINEER LICENSE NO. 24GE031859

151 / 170

P:\File #\2066-Sea Isle Blvd - McCormick Taylor\2066-Acoscad Landdesk Project 53-98 DATUM\Menu\FINAL DESIGN 9-6-11\2066-5033-2D\sunks creek\2066-05-11\dwg, 5/6/2011 11:18:50 PM, wgibling

STATE	FEDERAL PROJECT NO.
N.J.	STP-0115(104)

GIBSON ASSOCIATES, P.A.
CONSULTING ENGINEERS AND SURVEYORS
522 SEA ISLE BOULEVARD
OCEAN VIEW, NEW JERSEY 08230
(609) 624-1944

McCormick Taylor
Engineers & Planners
Since 1946

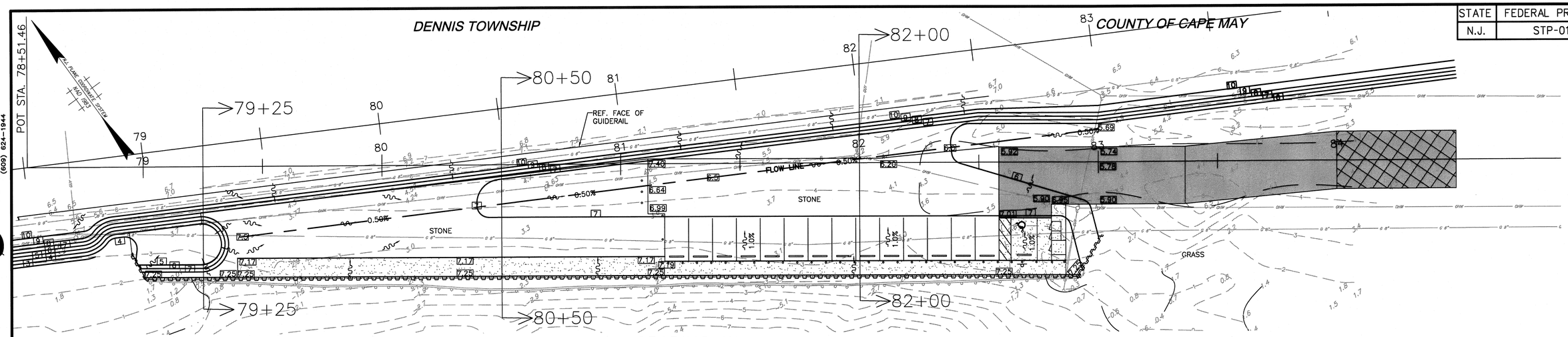

GRADING PLAN

0 10 20 40 60 80 100 FEET

SCALE 1" = 20'

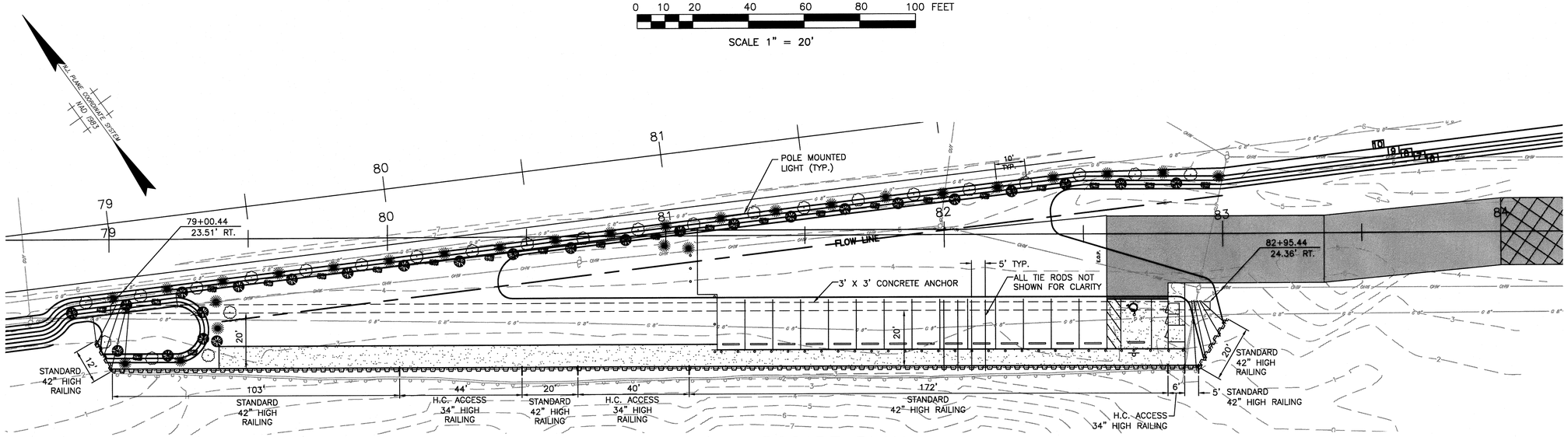

RAILING & LANDSCAPE PLAN

0 10 20 40 60 80 100 FEET

SCALE 1" = 20'

GENERAL NOTES:

1. PORTABLE RESTROOMS TO BE LEASED AND SUPPLIED BY OTHERS.
2. REFERENCE: PROFILE SHEET P-11 OLD SEA ISLE BOULEVARD-WEST PROFILE.

LEGEND:

- 4" BOLLARD
- PROPOSED GRADE
- EXISTING SPOT ELEVATION
- EXISTING CONTOUR
- EXISTING TOP OF CHANNEL BANK
- PROPOSED ASPHALT
- EDGE OF EXISTING ASPHALT
- BULKHEAD

LANDSCAPE SCHEDULE:

ITEM No.	SYMBOL	QUANTITY	COMMON NAME	BOTANICAL NAME	REMARKS
811063M		23	ROSA RUGOSA	ROSACEAE	#3 CONTAINER (WELL DEVELOPED)
811042M		27	EASTERN RED CEDAR	JUNIPERUS VIRGINIANA	5'-6' HIGH B & B
811063M		26	NORTHERN BAYBERRY	MORELLA PENSYLVANICA	#3 CONTAINER (WELL DEVELOPED) 18"-24" HIGH
811042M		25	JAPANESE BLACK PINE	PINUS THUNBERGII	5'-6' HIGH B & B

S-2 / S-4

COUNTY OF CAPE MAY

SITE PLANS

SUNK'S CREEK RECREATIONAL AREA SITE PLAN

Gibson Associates, P.A.

DATE: 4/8/14

WALTER E. SURRAN, JR., P.E.

NEW JERSEY PROFESSIONAL ENGINEER LICENSE NO. 24GE031859

152 / 178

STATE	FEDERAL PROJECT NO.
N.J.	STP-0115(104)

DENNIS TOWNSHIP

COUNTY OF CAPE MAY

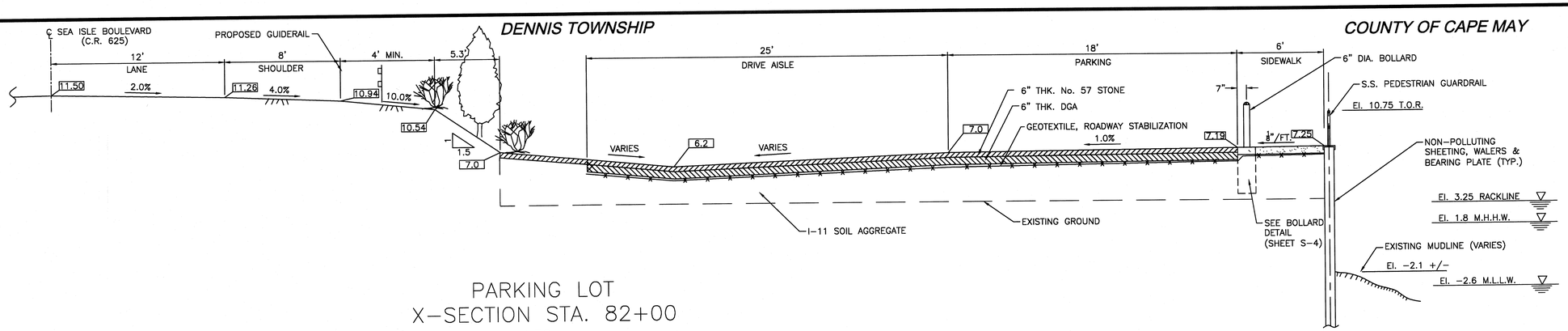

PARKING LOT
X-SECTION STA. 82+00
N.T.S.

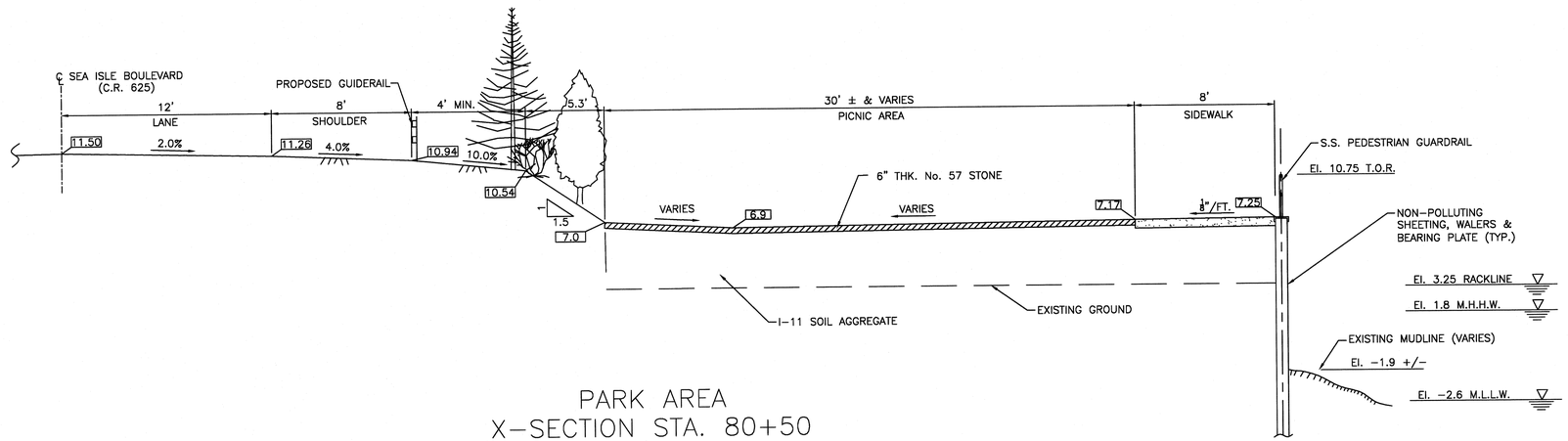

PARK AREA
X-SECTION STA. 80+50
N.T.S.

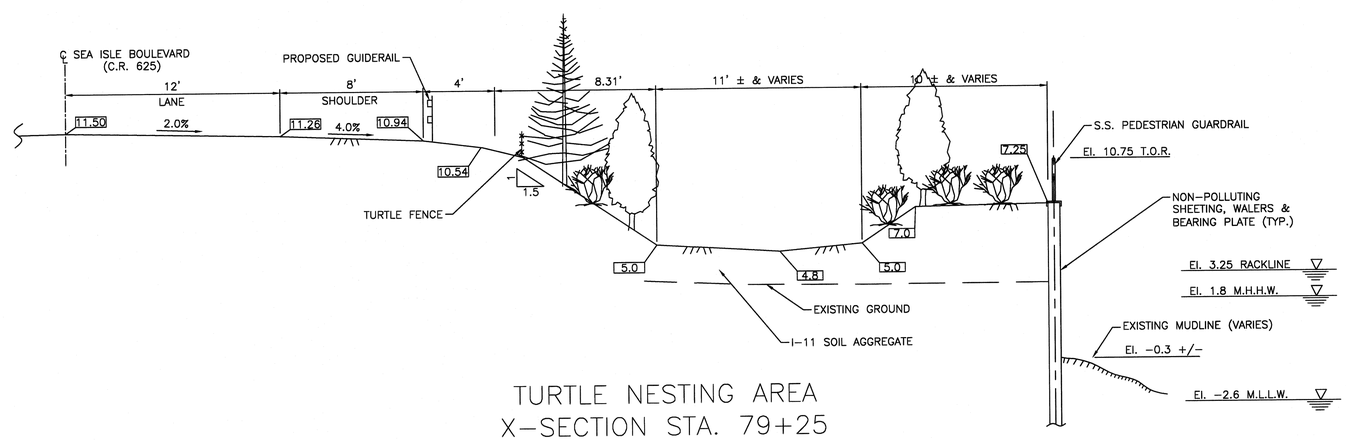

TURTLE NESTING AREA
X-SECTION STA. 79+25
N.T.S.

GIBSON ASSOCIATES, P.A.
CONSULTING ENGINEERS AND SURVEYORS
522 SEA ISLE BOULEVARD
OCEAN VIEW, NEW JERSEY 08230
(609) 624-1844

McCormick Taylor
Engineers & Planners
Since 1946

S-3
S-4

COUNTY OF CAPE MAY

SITE PLANS

SUNK'S CREEK RECREATIONAL AREA
SITE PLAN

Gibson Associates, P.A.

DATE: 4/8/19

WALTER E. SURRAN, JR., P.E.
NEW JERSEY PROFESSIONAL ENGINEER LICENSE NO. 24GE031859

153
170

STATE	FEDERAL PROJECT NO.
N.J.	STP-0115(104)

GIBSON ASSOCIATES, P.A.
CONSULTING ENGINEERS AND SURVEYORS
522 - 5EA ISLE BOULEVARD
OCEAN VIEW, NEW JERSEY 08230
(609) 624-1944

McCormick Taylor
Engineers & Planners
Since 1946

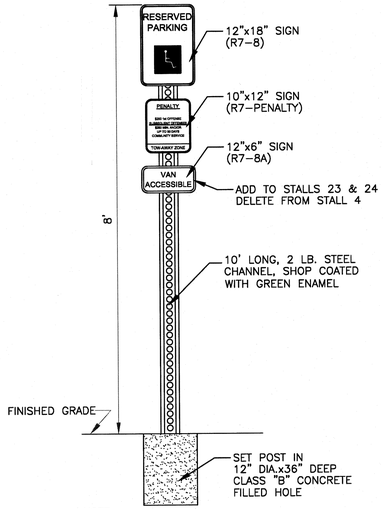

NOTE:
ONE HANDICAP SIGN TO BE INSTALLED AT EACH HANDICAP PARKING STALL.

612003 HANDICAP SIGN AND SIGN POST DETAIL

N.T.S.

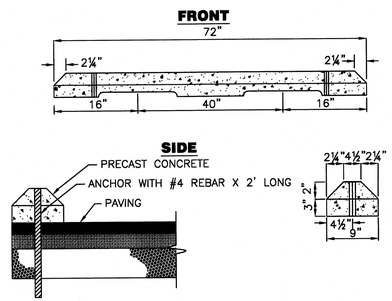

607089 PRECAST CONCRETE WHEEL STOP DETAIL

N.T.S.

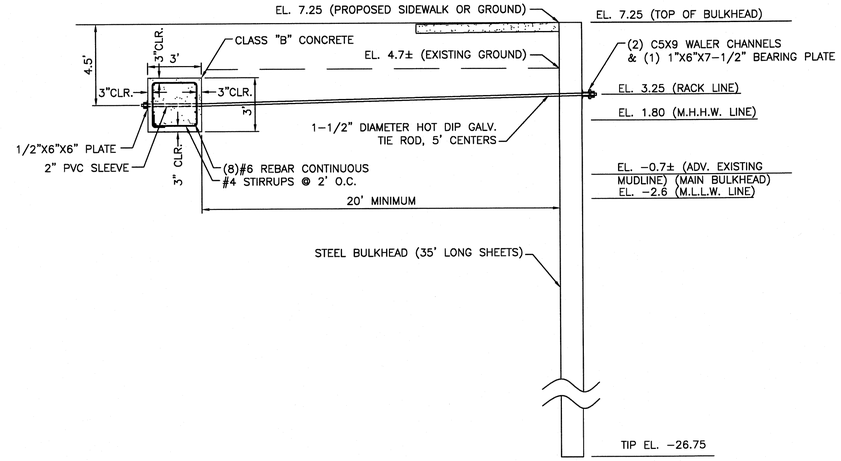

511006 PROPOSED BULKHEAD DETAIL

N.T.S.

GENERAL NOTES:

1. STEEL SHEET PILE DATA
   (A) MINIMUM SECTION MODULUS REQUIRED = 60.7 IN^3/FT.
   (B) STEEL SHEET PILING SHALL CONFORM TO ASTM A572, GRADE 50.
   (C) APPLY COAL TAR PAINT (BLACK COLOR) IN ACCORDANCE WITH THE STANDARDSPECIFICATIONS. EXTEND COATING 6" BELOW FINISH GRADE LINE.
2. ALL WALER, CAP, BEARING PLATE, TIE RODS, NUTS AND BOLTS TO BE GALVANIZED.
3. THE REINFORCING STEEL IN THE DEADMAN TO BE EPOXY COATED.

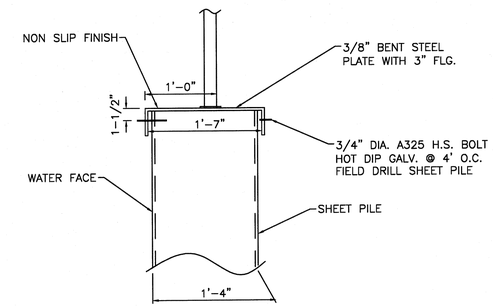

511006 STEEL BULKHEAD CAP DETAIL

N.T.S.

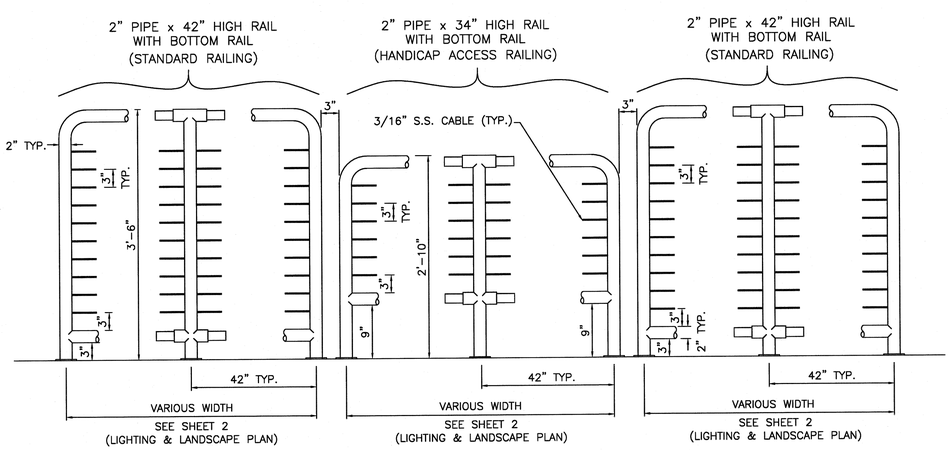

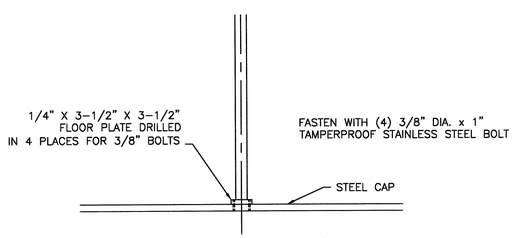

NOTE: ALL 2" PIPE TO BE 316 STAINLESS STEEL, ROUND, SCHEDULE 80

509100 ORNAMENTAL S.S. CABLE RAILING DETAIL

N.T.S.

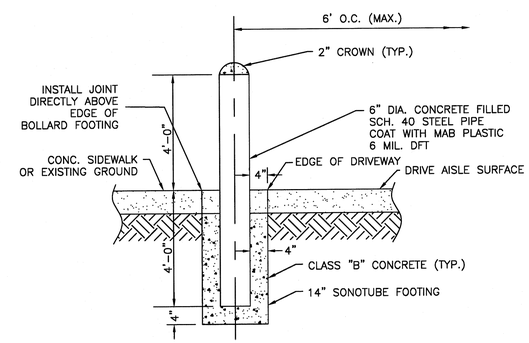

159011 BOLLARD DETAIL

N.T.S.

S-4 / S-4

COUNTY OF CAPE MAY

SITE PLANS

SUNK'S CREEK RECREATIONAL AREA SITE PLAN

Gibson Associates, P.A.

Walter E. Surran Jr. DATE: 4/8/14

WALTER E. SURRAN, JR., P.E.

NEW JERSEY PROFESSIONAL ENGINEER LICENSE NO. 24GE031859

154 / 170

P:\File #\24566-Sea Isle Blvd.-McCormick Taylor\24566-AutoCad Landscape Project 83-98 DATUM\dwg\FINAL DESIGN 9-0-1 112\566-S033-220sunks creek\09-05-11\Jeng 9/6/2011 10:09 PM, wagstaff

McCormick Taylor
Engineers & Planners Since 1946

FILE NAME: X:\5072-01(Sea Isle Blvd)\CADD\Compensatory Mitigation Plans\01-Notes\GN-01.dgn
PEN TABLE: X:\5072-01(Sea Isle Blvd)\CADD\Compensatory Mitigation Plans\01-Notes\notes.tbl
REV. DATE: 10/15/2013
SCALE: 30.0000 ft / IN.

STATE	FEDERAL PROJECT NO.
N.J.	STP-0115(104)

ADMINISTRATIVE REQUIREMENTS

1. THE MITIGATION DESIGNER (MD), AS DESIGNATED BY THE COUNTY, WILL ACT AS THE AGENT AND LIAISON FOR THE COUNTY FOR ALL MITIGATION SITE ACTIVITIES; INCLUDING ALL NJDEP AND USACE COORDINATION, MEETINGS, INSPECTIONS, APPROVALS, ETC. THE CONTRACTOR AND RESIDENT ENGINEER ARE TO COORDINATE AND PERFORM ALL MITIGATION SITE ACTIVITIES AS DIRECTED BY THE MD.

2. THIS COMPENSATORY MITIGATION PROPOSAL MUST BE APPROVED IN WRITING BY THE NJDEP AND USACE PRIOR TO THE COMMENCEMENT OF ANY SIB RECONSTRUCTION WORK.

3. NO CHANGES TO THE MITIGATION DESIGN ARE ALLOWED WITHOUT THE PRIOR WRITTEN APPROVAL OF THE NJDEP AND USACE. ALL MODIFIED PLANS THAT MAY RESULT FROM MITIGATION SITE FIELD ADJUSTMENTS AND/OR CORRECTIVE WORK MUST BE SIGNED, DATED, AND SEALED.

4. ALL MITIGATION SITE WORK MUST OCCUR DURING AND MUST BE COMPLETED WITHIN THE CONSTRUCTION SCHEDULE OF THE OVERALL PROJECT. THE CONTRACTOR WILL BE RESPONSIBLE FOR ENSURING THAT MITIGATION SITE CONSTRUCTION IS CONCURRENT WITH THE CONSTRUCTION OF THE OVERALL PROJECT. CONCURRENT MEANS THAT AT ANY GIVEN TIME, THE MITIGATION MUST TRACK AT THE SAME OR GREATER PERCENTAGE OF COMPLETION AS THE PROJECT AS A WHOLE. THE SEQUENCE OF CONSTRUCTION PROPOSED FOR THIS PROJECT PROVIDES FOR ACCEPTABLE CONCURRENT MITIGATION. THE CONTRACTOR WILL BE REQUIRED TO SUBMIT A SCHEDULE TO THE MD THAT MEETS THE CONCURRENCY REQUIREMENT, INCLUDING PROJECTED DATES FOR ALL GRADING AND PLANTING ACTIVITIES. THEREAFTER, THE CONTRACTOR MUST SUBMIT A MODIFIED SCHEDULE TO THE MD IN ALL CASES WHEN THE TIMELINE FOR PROJECTED MITIGATION ACTIVITIES / MILESTONES IS AFFECTED. ANY SIGNIFICANT CHANGE TO THE APPROVED TIMELINE FOR MITIGATION SITE ACTIVITIES, AS DETERMINED BY THE MD, SHALL BE SUBJECT TO REVIEW AND APPROVAL BY BOTH THE NJDEP AND USACE PRIOR TO COMMENCEMENT OF SUCH ACTIVITIES.

5. THE MD MUST BE PRESENT ON-SITE DURING ALL CRITICAL STAGES OF MITIGATION CONSTRUCTION AND DURING THE RESTORATION OF ANY TEMPORARILY IMPACTED AREAS. CRITICAL STAGES OF MITIGATION CONSTRUCTION WILL INCLUDE, AS APPLICABLE BUT NOT LIMITED TO, ALL HERBICIDE APPLICATIONS, INVASIVE VEGETATION/SOIL REMOVAL, EQUALIZER PIPE RECONSTRUCTION, EARTHMOVING ACTIVITIES, PLANTINGS, EXISTING BULKHEAD REMOVAL, PLACEMENT OF MITIGATION SITE EROSION/SEDIMENT CONTROLS, ON-SITE AGENCY MEETINGS, AND INSPECTIONS.

6. ON-SITE PRE-CONSTRUCTION MITIGATION MEETING: AT LEAST 30 DAYS PRIOR TO THE START OF ANY WETLAND MITIGATION SITE CONSTRUCTION, THIS ON-SITE MEETING IS TO BE ARRANGED BY THE MD VIA WRITTEN NOTIFICATION TO NJDEP MITIGATION UNIT AND THE USACE. ATTENDEES ARE TO INCLUDE THE COUNTY, CONTRACTOR, MD, NJDEP, AND THE USACE. AT THIS MEETING, EXISTING VEGETATION AND OTHER SITE FEATURES, INCLUDING CHANNELS, WILL BE IDENTIFIED FOR PRESERVATION. THE CONTRACTOR SHALL MARK OUT ALL SUCH AREAS WITH STAKES AND/OR CAUTION FENCE AS DIRECTED BY THE MD. THE CONTRACTOR SHALL ALSO PROVIDE A SURVEY OF THE MARK OUT AREAS TO THE MD. ALL SUCH AREAS ARE TO REMAIN UNDISTURBED FOR THE PROJECT DURATION, EXCEPT FOR MINOR, UNAVOIDABLE TEMPORARY DISTURBANCES FOR WHICH THE CONTRACTOR SHALL FIRST OBTAIN THE APPROVAL OF THE MD. ALL TEMPORARILY DISTURBED AREAS SHALL BE RESTORED BY THE CONTRACTOR TO THE SATISFACTION OF THE MD. SEE GRADING NOTES FOR MORE INFORMATION.

7. POST-GRADING / PRE-PLANTING MEETING: WITHIN 30 DAYS OF FINAL GRADING OF THE WETLAND MITIGATION SITE AND PRIOR TO PLANTING, THIS MEETING IS TO BE ARRANGED BY THE MD VIA WRITTEN NOTIFICATION TO NJDEP MITIGATION UNIT AND THE USACE. ATTENDEES ARE TO INCLUDE THE COUNTY, CONTRACTOR, MD, NJDEP, AND USACE. THE WRITTEN AGENCY NOTIFICATION WILL INCLUDE A ONE-HALF FOOT INTERVAL CONTOUR SURVEY MAP OF THE WETLAND MITIGATION SITE UPON COMPLETION OF EXCAVATION / GRADING ACTIVITIES; WHICH THE USACE MUST APPROVE PRIOR TO INITIATION OF SEEDING AND/OR PLANTING. THE CONTRACTOR SHALL BE RESPONSIBLE FOR PRODUCING THIS SURVEY AND PROVIDING TO THE MD.

8. PERMANENT SIGNS: WITHIN 30 DAYS AFTER FINAL PLANTING OF THE WETLAND MITIGATION SITE, THE CONTRACTOR MUST POST PERMANENT SIGNS IDENTIFYING THE WETLAND MITIGATION SITE, WHICH MUST ALSO INCLUDE SEVERAL USE RESTRICTIONS AND CONTACT INFORMATION AS DETAILED UNDER MITIGATION CONDITION 6.J. OF THE APPROVED NJDEP PERMIT. A SIGN DETAIL AND PROPOSED LOCATIONS ARE PROVIDED WITH THE COMPENSATORY MITIGATION PLANS.

9. CONSTRUCTION COMPLETION REPORT: WITHIN 30 DAYS OF FINAL PLANTING OF THE WETLAND MITIGATION SITE, THE COUNTY MUST SUBMIT A CONSTRUCTION COMPLETION REPORT TO THE NJDEP AND USACE, DETAILING AS-BUILT CONDITIONS AND ANY MODIFICATIONS TO THE APPROVED MITIGATION PLAN THAT WERE MADE DURING MITIGATION SITE CONSTRUCTION. THIS REPORT IS TO INCLUDE ALL REQUIRED FORMS; AS-BUILT PLANS; TABULATION OF ALL PLANTED SPECIES AND QUANTITIES; PHOTOS AND PHOTO KEY MAP; AND WILL ALSO INCLUDE DOCUMENTATION OF OW/ISS CREATION AT THE BULKHEAD SITE. THE CONTRACTOR SHALL ASSIST THE MD BY PROVIDING SURVEY AND AS-BUILT PLANS FOR BOTH THE WETLAND MITIGATION SITE AND THE BULKHEAD REPLACEMENT SITE; AS WELL AS QUANTITIES OF PLANTED SPECIES.

WETLAND SLOPE SEED MIX

COMMON NAME	SCIENTIFIC NAME	MINIMUM % PURITY	MINIMUM % GERMINATION	% OF TOTAL WEIGHT OF MIXTURE
BIG BLUE STEM	ANDROPOGON GERARDII	95	85	23
SHOWY TICK TREFOIL	DESMODIUM CANADENSE	95	85	3
SLENDER GOLDENTOP	EUPATORIUM CAROLINIANA	95	85	3
OX EYE SUNFLOWER	HELIOPSIS HELIANTHOIDES	95	85	3
ANNUAL RYE	LOLIUM MULTIFLORUM	98	90	25
SPOTTED BEEBALM	MONARDA PUNCTATA	95	85	3
SWITCHGRASS	PANICUM VIRGATUM	92	85	25
INDIANGRASS	SORGHASTRUM NUTANS	92	85	15

BEST MANAGEMENT PRACTICES REQUIREMENTS

1. REFERENCE TO THE APPROVED PLANS: ALL ASPECTS OF THE APPROVED ENVIRONMENTAL/PERMIT PLANS; INCLUDING THE LISTED ENVIRONMENTAL NOTES AND COMMITMENTS AND THE LISTED CONDITIONS UNDER ALL PERMITS AND THEIR RESTRICTIONS, ARE INCORPORATED BY REFERENCE INTO THIS COMPENSATORY MITIGATION PROPOSAL. HOWEVER, ENVIRONMENTAL NOTE AND COMMITMENT NO. 37 SHALL ONLY BE APPLICABLE TO THE FRESHWATER WETLAND AT THE GSP RAMP B INFIELD. ALL EXCAVATION, GRADING, AND PLANTING ACTIVITIES AT THE WETLAND BOUNDED BY OLD SEA ISLE BLVD. AND SEA ISLE BLVD. (STATIONS 85-94) ARE TO BE CONDUCTED IN ACCORDANCE WITH THE COMPENSATORY MITIGATION PLANS.

2. DISPOSAL OF UNDESIRABLE INVASIVE VEGETATION, SOILS, AND DEBRIS: THE RESIDENT ENGINEER/CONTRACTOR MUST LOCATE SUITABLE OFF-SITE LOCATIONS FOR THE DISPOSAL OF UNDESIRABLE VEGETATION, SOILS, AND DEBRIS. THE MD WILL IDENTIFY INVASIVE VEGETATION AND THE UNDERLYING SOILS TO BE REMOVED. THIS DISPOSAL REQUIREMENT ALSO INCLUDES ALL DEBRIS ARISING FROM REMOVAL OF EXISTING PIPES, TIMBER HEADWALLS/WINGWALLS, AND BULKHEAD MATERIALS. SUCH MATERIALS ARE TO BE DISPOSED AT LEGAL LANDFILLS ACCORDING TO APPLICABLE FEDERAL, STATE, AND LOCAL LAWS, RULES, AND REGULATIONS. ALL DEBRIS, PARTICULARLY TEMPORARILY STOCKPILED INVASIVE VEGETATION AND THE UNDERLYING SOILS, MUST BE PROTECTED WITH APPROPRIATE SESC MEASURES; AND MUST BE REMOVED FROM THE PROJECT LIMITS WITHIN 24 HOURS OF COMPLETION OF SUCH WORK.

3. CONSTRUCTION EQUIPMENT / SOIL COMPACTION: IT IS VITAL THAT SOILS WITHIN THE WETLAND MITIGATION SITE ARE NOT COMPACTED. THEREFORE, THE CONTRACTOR MUST PERFORM AS MUCH CLEARING AND GRADING WORK AS POSSIBLE FROM SEA ISLE BOULEVARD AND ITS SLOPE AREA. THIS MAY BE ACCOMPLISHED VIA LONG-REACH BOOM EQUIPMENT OR ALTERNATIVE METHOD AT THE DISCRETION OF THE CONTRACTOR. PERFORM FINAL GRADING FROM THE SITE INTERIOR AND GRADE OUTWARDS, WHILE DECOMPACTING THE UNDERLYING SOILS AS THE EQUIPMENT IS EXITING. SOILS ARE TO BE FREE OF COMPACTION UPON COMPLETION OF GRADING WORK. THIS MAY BE ACCOMPLISHED VIA DISC HARROW OR ALTERNATIVE METHOD AT THE DISCRETION OF THE CONTRACTOR. ANY CLEARING/GRADING WORK THAT MAY REQUIRE EQUIPMENT WITHIN THE WETLAND MITIGATION SITE MUST BE PERFORMED WITH SMALL, LIGHT-WEIGHT EQUIPMENT, AS APPROVED BY THE MD. ALL EQUIPMENT REQUIRED TO TRAVERSE WETLANDS IN THE WETLAND MITIGATION SITE ARE TO BE SUPPORTED ON MATS TO MINIMIZE SOIL COMPACTION. TREATED TIMBER IS PROHIBITED FOR THE ENTIRE PROJECT. ONLY NON-POLLUTING AND NON-TREATED TIMBER MATTING WILL BE ALLOWED. IN ADDITION, ALL EQUIPMENT, ESPECIALLY TRACKS AND TIRES, ARE TO BE THOROUGHLY CLEANED EVERY TIME EQUIPMENT OR VEHICLES MOVE FROM AN AREA CONTAINING INVASIVE PLANTS, OR FROM OFF-SITE TO THE MITIGATION AREA. ANY PROPOSED CHANGES TO THE ABOVE CONSTRUCTION METHODOLOGY MUST BE DISCUSSED WITH AND APPROVED BY THE MD; AND MAY REQUIRE PREREQUISITE REVIEW AND APPROVAL BY THE US ARMY CORPS OF ENGINEERS AND THE NJDEP.

4. HERBICIDES: IF AND WHEN DETERMINED NECESSARY BY THE MD, THE APPLICATION OF HERBICIDES SUCH AS GLYPHOSATE/RODEO MUST BE APPROVED BY BOTH THE USACE AND NJDEP; AND CONDUCTED BY A LICENSED APPLICATOR. THE CONTRACTOR AND/OR APPLICATOR WILL BE RESPONSIBLE FOR SECURING ALL REQUIRED PERMITS TO CONDUCT HERBICIDE APPLICATION.

5. HYDRIC SOIL SOURCES: EXISTING SUITABLE HYDRIC SOILS (I.E., DEVOID OF INVASIVE VEGETATION AND ROOTS, AS DETERMINED BY THE MD) WILL BE STOCKPILED FROM REGRADING ACTIVITIES FOR USE AT THE PROPOSED WETLAND CREATION SITES. TEMPORARILY STOCKPILE SUCH SOILS IN UPLANDS ADJACENT TO THE CREATION SITES, NEAR STATIONS 86+00 AND 93+00. IF ADDITIONAL SOILS ARE REQUIRED, ONLY CLEAN HIGH QUALITY TOPSOIL, OF THE SAME PH AND ORGANIC CONTENT AS THE EXISTING HYDRIC SOILS, ARE BE LEGALLY OBTAINED AND BROUGHT TO THE SITE BY THE CONTRACTOR TO COMPLETE THE PROPOSED GRADING. SUCH SOILS WILL EVENTUALLY CONVERT TO HYDRIC CONDITIONS BASED ON THE DESIGNED HYDROLOGIC REGIME, WHICH WILL BE VERIFIED DURING THE POST-CONSTRUCTION MONITORING PROGRAM.

PLANTING NOTES

1. PLANT PLUGS AT 12 INCH SPACING FROM CENTERS.

2. PLUGS ARE TO BE INSERTED INTO THE GROUND TO THE TOP OF GROWING SUBSTRATE WITH GROUND FIRMLY PLACED AROUND THE PLUG TO PREVENT THE PLUG FROM BEING UPROOTED.

3. SPARTINA ALTERNIFLORA PLUGS ARE TO BE PLANTED BETWEEN ELEVATION 1.5 TO 2.0 WITHIN ANY DISTURBED AND NEWLY CREATED CHANNELS.

4. SPARTINA PATENS PLUGS ARE TO BE PLANTED BETWEEN ELEVATION 2.O TO 2.7, CONCENTRATED AT ELEVATION 2.5.

5. PLANTING SHALL OCCUR ALONG THE ENTIRE LENGTH OF ALL DISTURBED AND NEWLY CREATED CHANNELS EXTENDING AT LEAST 5 FEET FROM THE TOP OF THE CHANNEL (ELEVATION 2.5).

6. SPARTINA PATENS PLANTING AREA SHALL BE PLANTED WITH ALTERNATING PLANTED AND UNPLANTED AREAS (IN ADDITION TO CHANNEL PLANTINGS). PLANTED AREAS ARE TO ENCOMPASS AN AREA OF 800 TO 1000 SQ. FT. AND UNPLANTED AREAS AN AREA OF NO MORE THAN 500 SQ. FT.

7. SEED ALL DISTURBED AREAS SURROUNDING THE WETLAND SITE FROM ELEVATION 3.0 AND ABOVE WITH THE WETLAND SLOPE SEED MIX.

8. RESTORE DISTURBED WETLAND AREAS AT THE EQUALIZER PIPE REPLACEMENT NORTH OF SEA ISLE BLVD, APPROX. STATIONS 91+75 (L) TO 92+50 (L), WITH SPARTINA PATENS PLUGS.

GRADING NOTES

1. IN PREPARATION FOR THE ON-SITE PRE-CONSTRUCTION MITIGATION MEETING: FROM APPROXIMATELY STA. 85+50 TO STA. 91+00, STAKE THE SITE'S PROPOSED CHANNEL CENTER LINE AT 50 FOOT INTERVALS; AND STAKE THE ELEVATION 2.5 OUTER LIMITS AT 100 FOOT INTERVALS.

2. DURING THE ON-SITE PRE-CONSTRUCTION MITIGATION MEETING: ADD OR ADJUST STAKES AND STAKE OUT SITE GRADE ADJUSTMENTS TO THE PLANS AS DIRECTED BY THE MD. THESE CHANGES MAY INVOLVE ADJUSTMENTS IN CHANNEL LOCATION AND REDUCTION IN REQUIRED GRADING DEPTHS.

3. THE MAIN INTENT OF THE SITE GRADING IS TO EXPAND THE EXTENT OF THE WETLAND AND OBTAIN A SITE ELEVATION SUITABLE FOR THE BULK OF THE SITE TO SUPPORT THE GROWTH OF SPARTINA PATENS - ELEVATION 2.5.

4. PERFORM ALL GRADING AND SOIL DECOMPACTING ACTIVITIES PER BMP NOTE NO. 3.

5. RETAIN THE WIDTH, DEPTH AND CENTER OF THE EXISTING CHANNELS TO THE EXTENT POSSIBLE. NO WORK IS TO OCCUR WITHIN EXISTING CHANNELS EXCEPT FOR MAKING CONNECTION WITH NEW CHANNEL AREAS.

6. LIMIT DISTURBANCE/GRADING OF EXISTING WETLAND AREAS BELOW ELEVATION 2.5 TO ONLY WHAT IS REQUIRED TO BRING THE REST OF THE SITE TO DESIGNATED GRADE.

7. FINAL GRADE OUTSIDE OF THE CHANNELS IS TO BE WITHIN +/- 0.25 FEET OF THE DESIGNATED GRADE. THE GROUND IS TO RETAIN HUMMOCKY (UNDULATING) CONDITIONS WITHIN THE ACCEPTABLE +/- 0.25 FOOT GRADE DIFFERENTIAL.

8. SOILS REMOVED WITHIN THE WETLAND WHICH ARE FREE OF INVASIVE PHRAGMITES AUSTRALIS ARE TO BE STOCKPILED IN UPLAND AREAS. SEE BMP REQUIREMENT NO. 5 FOR MORE INFORMATION.

9. UPON ACHIEVING THE DESIGNATED GRADES FOR THE SITE, IDENTIFY ALL AREAS WITHIN ELEVATION 3.0 THAT ARE NOT COMPRISED OF AT LEAST 10% ORGANIC MATERIAL WITHIN THE TOP 6 INCHES OF THE SURFACE. PLACE THE STOCKPILED TOPSOIL OVER THESE AREAS AT A DEPTH OF AT LEAST 3 INCHES WHILE MAINTAINING THE +/-0.25 ALLOWABLE GRADE DIFFERENTIAL.

CM-1 / CM-16

COUNTY OF CAPE MAY

COMPENSATORY MITIGATION PLANS

SEA ISLE BOULEVARD (C.R. 625)
FROM GARDEN STATE PARKWAY TO
BRIDGE OVER LUDLAM THOROFARE

McCormick Taylor, Inc.
CERTIFICATION OF AUTHORIZATION NO. 24GA28044300
DATE: 4/4/14
ANTHONY M. DIMAGGIO, P.E.
NEW JERSEY PROFESSIONAL ENGINEER LICENSE NO. 24GE04136200

STATE	FEDERAL PROJECT NO.
N.J.	STP-0115(104)

DENNIS TOWNSHIP **COUNTY OF CAPE MAY**

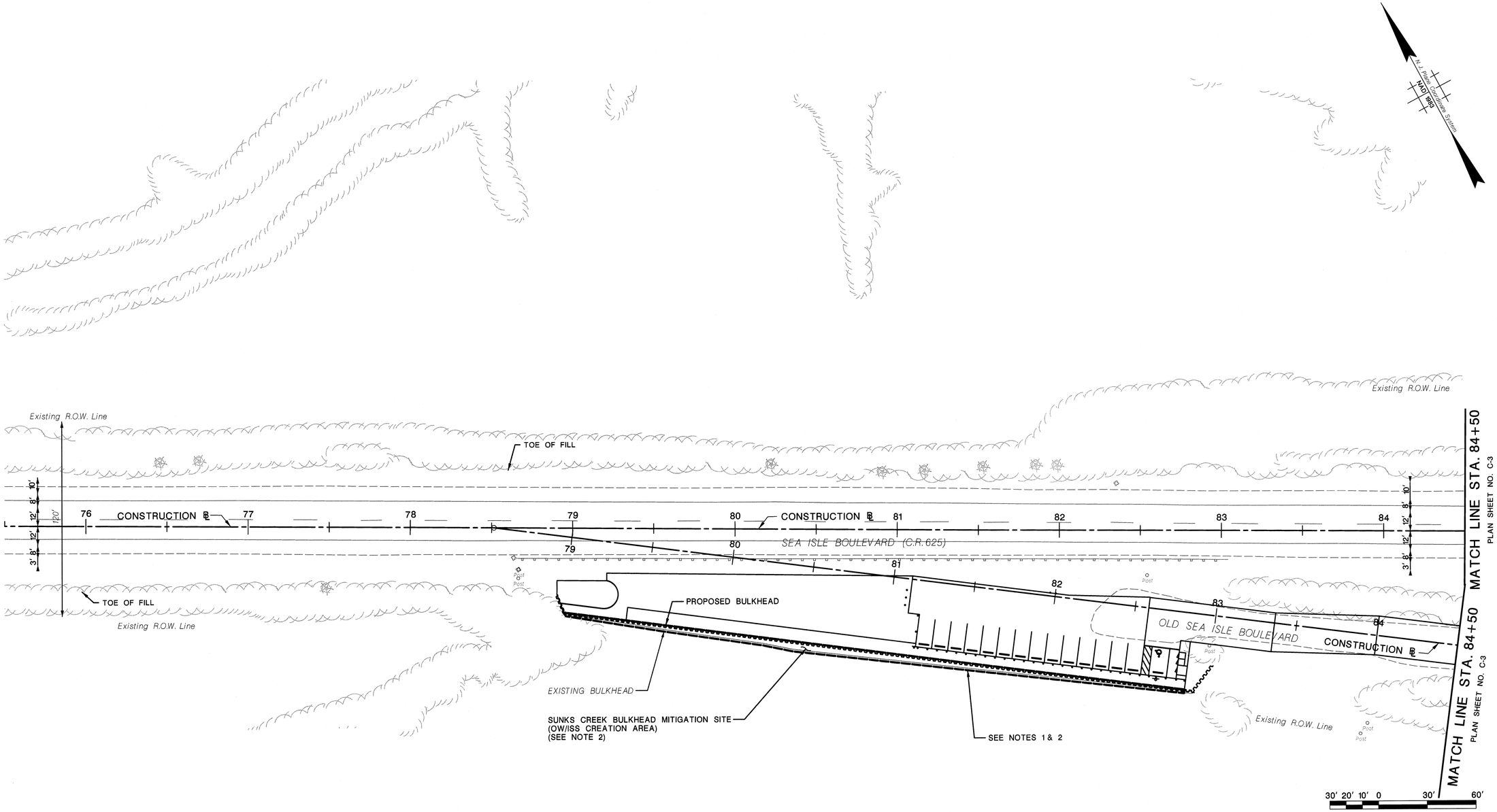

NOTE:

1. SEE SITE PLAN CM-5 FOR ENLARGED VIEW AND CROSS-SECTION.
2. SUNKS CREEK BULKHEAD MITIGATION SITE (OW/ISS CREATION AREA) IS THE AREA BETWEEN EXISTING AND PROPOSED BULKHEADS.

SUNKS CREEK BULKHEAD MITIGATION SITE

CM-2 / CM-16

COUNTY OF CAPE MAY

COMPENSATORY MITIGATION PLANS

SEA ISLE BOULEVARD (C.R. 625)
FROM GARDEN STATE PARKWAY TO
BRIDGE OVER LUDLAM THOROFARE

McCormick Taylor, Inc.
CERTIFICATION OF AUTHORIZATION NO. 24GA28044300
DATE: 4/4/14
ANTHONY M. DIMAGGIO, P.E.
NEW JERSEY PROFESSIONAL ENGINEER LICENSE NO. 24GE04136200

156
170

McCormick Taylor
Engineers & Planners
Since 1946

FILE NAME: X:\50720-01\Sea Isle Blvd\CADD\Compensatory Mitigation Plans\02-Construction\C-02.dgn
FILE TABLE: X:\50720-01\Sea Isle Blvd\CADD\Compensatory Mitigation Plans\02-Construction\mitigation.tbl
REV. DATE: 10/15/2013
SCALE: 30.0000 ft / IN.

STATE	FEDERAL PROJECT NO.
N.J.	STP-0115(104)

McCormick Taylor
Engineers & Planners Since 1945

FILE NAME: X:\5072-01\Sea Isle Blvd\CADD\Compensatory Mitigation Plans\02-Construction\C-03.dgn
PEN TABLE: X:\5072-01\Sea Isle Blvd\CADD\Compensatory Mitigation Plans\02-Construction\mitigation.tbl
REV. DATE: 10/15/2013
SCALE: 30:0000 ft / IN.

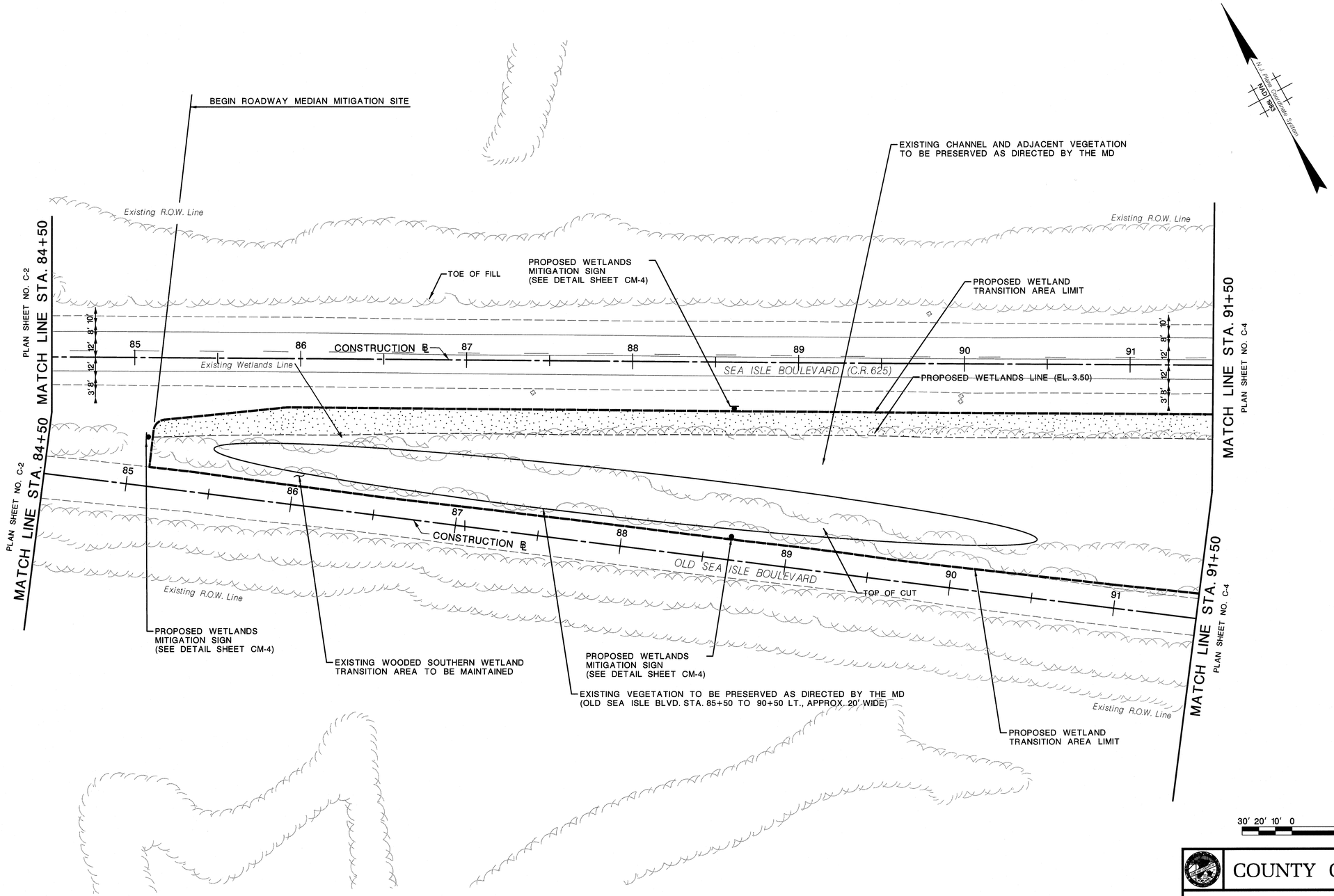

CM-3
CM-16

LANDSCAPE SCHEDULE FOR SHEET CM-3

ITEM No.	SYMBOL	QUANTITY	COMMON NAME	BOTANICAL NAME	REMARKS
806025P		1,037 S.Y.	SEE WETLAND SLOPE SEED MIX TABLE (SHEET CM-1)		FERTILIZING AND SEEDING, TYPE WT
811120M		20350 UNITS	SALT MEADOW GRASS	SPARTINA PATENS	PERENNIAL, 2" PLUG
811120M		11400 UNITS	SMOOTH CORDGRASS	SPARTINA ALTERNIFLORA	PERENNIAL, 2" PLUG

ROADWAY MEDIAN MITIGATION SITE

COUNTY OF CAPE MAY

COMPENSATORY MITIGATION PLANS

SEA ISLE BOULEVARD (C.R. 625)
FROM GARDEN STATE PARKWAY TO
BRIDGE OVER LUDLAM THOROFARE

McCormick Taylor, Inc.
CERTIFICATION OF AUTHORIZATION NO. 24GA28044300
DATE: 4/4/14
ANTHONY M. DIMAGGIO, P.E.
NEW JERSEY PROFESSIONAL ENGINEER LICENSE NO. 24GE04136200

DENNIS TOWNSHIP

COUNTY OF CAPE MAY

STATE	FEDERAL PROJECT NO.
N.J.	STP-0115(104)

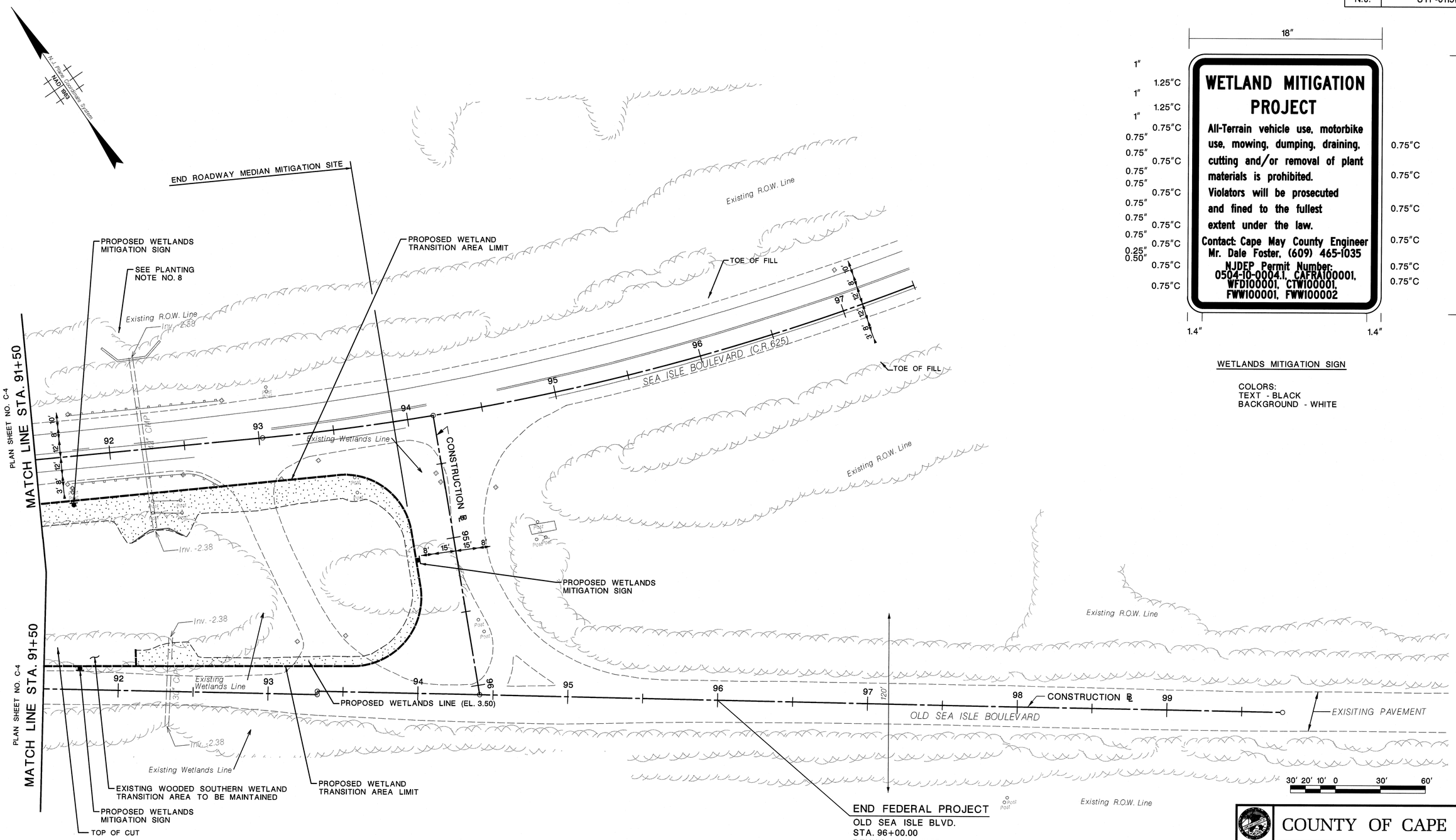

WETLANDS MITIGATION SIGN

COLORS:
TEXT - BLACK
BACKGROUND - WHITE

LANDSCAPE SCHEDULE FOR SHHET CM-4

ITEM No.	SYMBOL	QUANTITY	COMMON NAME	BOTANICAL NAME	REMARKS
806025P		717 S.Y.	SEE WETLAND SLOPE SEED MIX TABLE (SHEET CM-1)		FERTILIZING AND SEEDING, TYPE WT
811120M		20350 UNITS	SALT MEADOW GRASS	SPARTINA PATENS	PERENNIAL, 2" PLUG
811120M		11400 UNITS	SMOOTH CORDGRASS	SPARTINA ALTERNIFLORA	PERENNIAL, 2" PLUG

SIGN TABLE					
SIGN DESIGNATION	MESSAGE	SIZE IN X IN	AREA IN SQ. FT	REQUIRED QUANTITY IN NUMBER	TOTAL AREA IN SQ. FT
WETLANDS MITIGATION	WETLANDS MITIGATION SIGN	18 X 24	2.4	6	14.4
				TOTAL	14.4
				SAY	15.0

NOTE:
THE SIGN TABLE REPRESENTS THE TOTAL SQUARE FOOTAGE FOR THE WETLANDS MITIGATION SIGNS DETAILED ON SHEETS CM-3 AND CM-4.

ROADWAY MEDIAN MITIGATION SITE

CM-4 / CM-16

COUNTY OF CAPE MAY

COMPENSATORY MITIGATION PLANS

SEA ISLE BOULEVARD (C.R. 625)
FROM GARDEN STATE PARKWAY TO
BRIDGE OVER LUDLAM THOROFARE

McCormick Taylor, Inc.
CERTIFICATION OF AUTHORIZATION NO. 24GA28044300
DATE: 4/4/14
ANTHONY M. DIMAGGIO, P.E.
NEW JERSEY PROFESSIONAL ENGINEER LICENSE NO. 24GE04136200

158 / 170

McCormick Taylor
Engineers & Planners Since 1946

FILE NAME: X:\5072-01\Sea Isle Blvd\CADD\Compensatory Mitigation Plans\02-Construction\C-04.dgn
REV TABLE: X:\5072-01\Sea Isle Blvd\CADD\Mitigation Plans\03-Construction\mitigation.tbl
REV DATE: 10/17/2013
SCALE: 30.0000 ft / IN.

STATE	FEDERAL PROJECT NO.
N.J.	STP-0115(104)

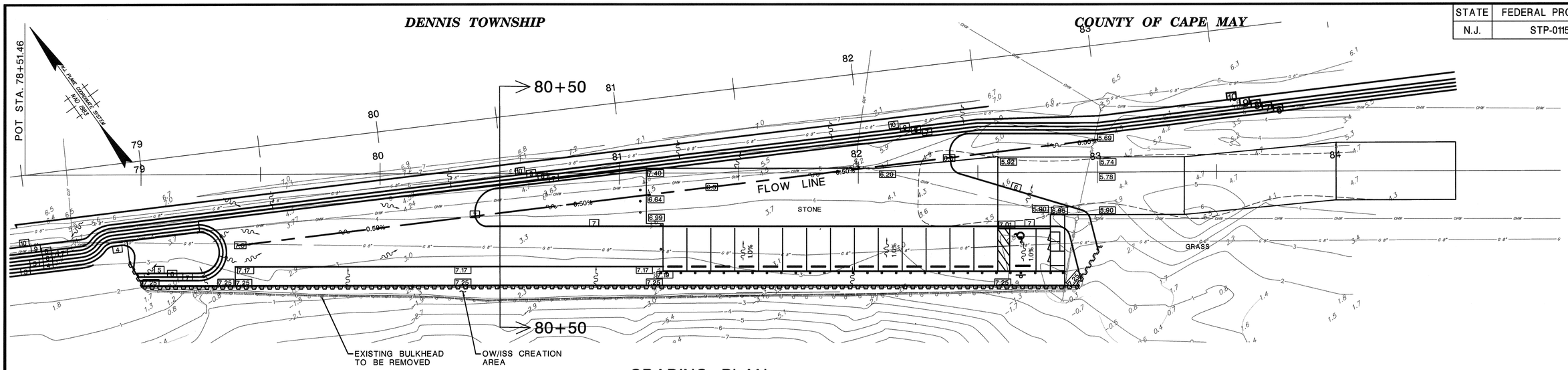

GRADING PLAN

0 10 20 40 60 80 100 FEET

SCALE 1" = 20'

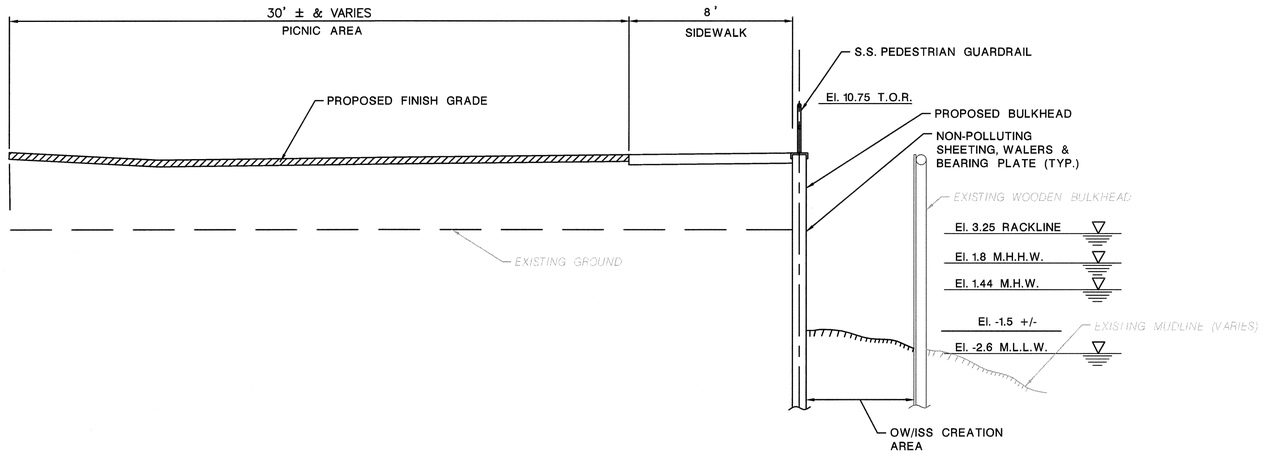

STA. 80+50

N. T. S.

GENERAL NOTES:

1. PORTABLE RESTROOMS TO BE LEASED AND SUPPLIED BY OTHERS.
2. REFERENCE: PROFILE SHEET P-11 OLD SEA ISLE BOULEVARD-WEST PROFILE.

LEGEND:

EXISTING BULKHEAD

PROPOSED BULKHEAD

SUNKS CREEK BULKHEAD MITIGATION SITE

CM-5 / CM-16

COUNTY OF CAPE MAY

COMPENSATORY MITIGATION PLANS

SEA ISLE BOULEVARD (C.R. 625) FROM GARDEN STATE PARKWAY TO BRIDGE OVER LUDLAM THOROFARE

McCormick Taylor, Inc.
CERTIFICATION OF AUTHORIZATION NO. 24GA28044300
DATE: 4/4/19
ANTHONY M. DIMAGGIO, P.E.
NEW JERSEY PROFESSIONAL ENGINEER LICENSE NO. 24GE04136200

159 / 170

McCormick Taylor
Engineers & Planners Since 1946

FILE NAME: X:\5972-01\Sea Isle Blvd\CADD\Compensatory Mitigation Plans\03-Site Plans\Site Plan.dgn
REV TABLE: X:\5972-01\Sea Isle Blvd\CADD\Mitigation Plans\03-Construction\mitigation.tbl
REV DATE: 10/15/2013
SCALE: 1.00 ' / IN.

STATE	FEDERAL PROJECT NO.
N.J.	STP-0115(104)

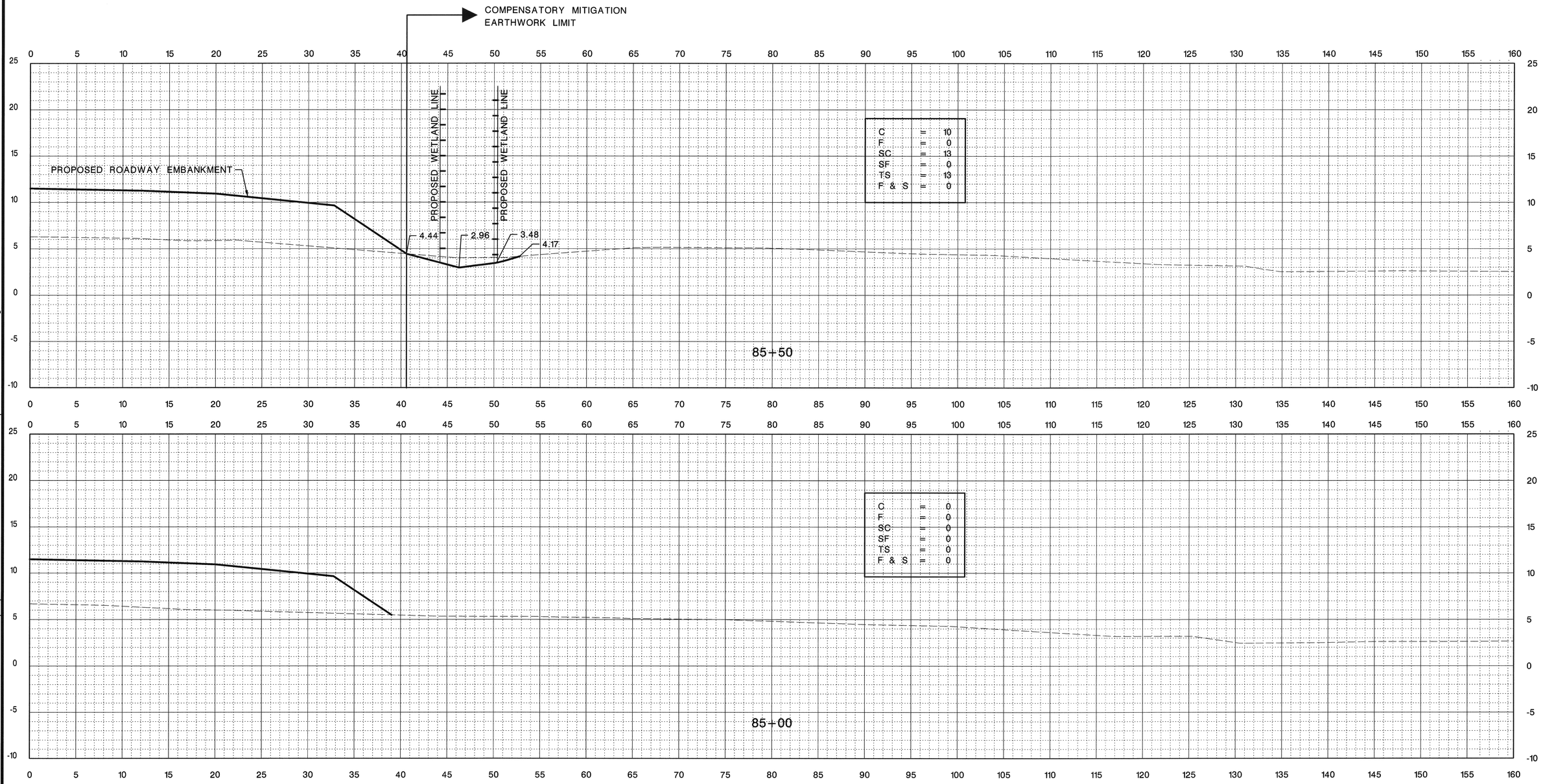

NOTE: THE EARTHWORK QUANTITY CALCULATIONS SHOWN ON EACH CROSS-SECTION ARE FOR THE MITIGATION AREA ONLY.

ROADWAY MEDIAN MITIGATION SITE

C.R. 625 B.L. STA. 85+00 - 85+50

CM-6 / CM-16

COUNTY OF CAPE MAY

COMPENSATORY MITIGATION PLANS

SEA ISLE BOULEVARD (C.R. 625) FROM GARDEN STATE PARKWAY TO BRIDGE OVER LUDLAM THOROFARE

McCormick Taylor, Inc.

CERTIFICATION OF AUTHORIZATION NO. 24GA28044300

DATE: 4/4/14

ANTHONY M. DIMAGGIO, P.E.

NEW JERSEY PROFESSIONAL ENGINEER LICENSE NO. 24GE04136200

160

170

McCormick Taylor
Engineers & Planners Since 1948

FILE NAME: $FILE$
PEN TABLE: $PENTBL$
REV. DATE: $DATE$
SCALE: $SCALE$

STATE	FEDERAL PROJECT NO.
N.J.	STP-0115(104)

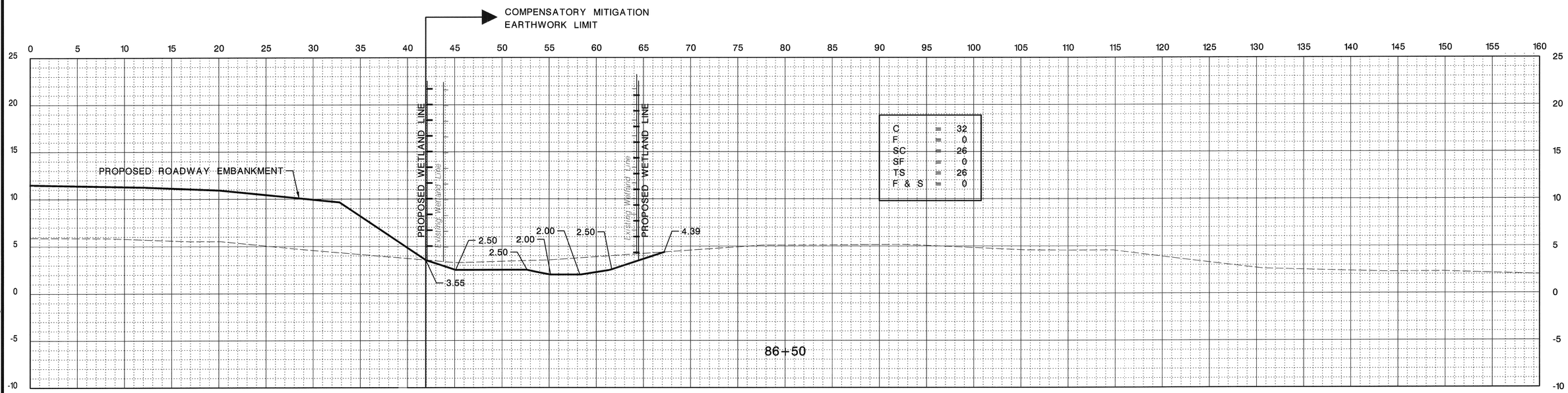

NOTE: THE EARTHWORK QUANTITY CALCULATIONS SHOWN ON EACH CROSS-SECTION ARE FOR THE MITIGATION AREA ONLY.

ROADWAY MEDIAN MITIGATION SITE

C.R. 625 B.L. STA. 86+00 - 86+50

CM-7 / CM-16

COUNTY OF CAPE MAY

COMPENSATORY MITIGATION PLANS

SEA ISLE BOULEVARD (C.R. 625) FROM GARDEN STATE PARKWAY TO BRIDGE OVER LUDLAM THOROFARE

McCormick Taylor, Inc.

CERTIFICATION OF AUTHORIZATION NO. 24GA28044300

DATE: 4/9/14

ANTHONY M. DIMAGGIO, P.E.

NEW JERSEY PROFESSIONAL ENGINEER LICENSE NO. 24GE04136200

161 / 170

McCormick Taylor
Engineers & Planners Since 1946

FILE NAME: $FILEL$
PEN TABLE: $PENTBLL$
REV DATE: $DATE$
SCALE: $SCALE$

STATE	FEDERAL PROJECT NO.
N.J.	STP-0115(104)

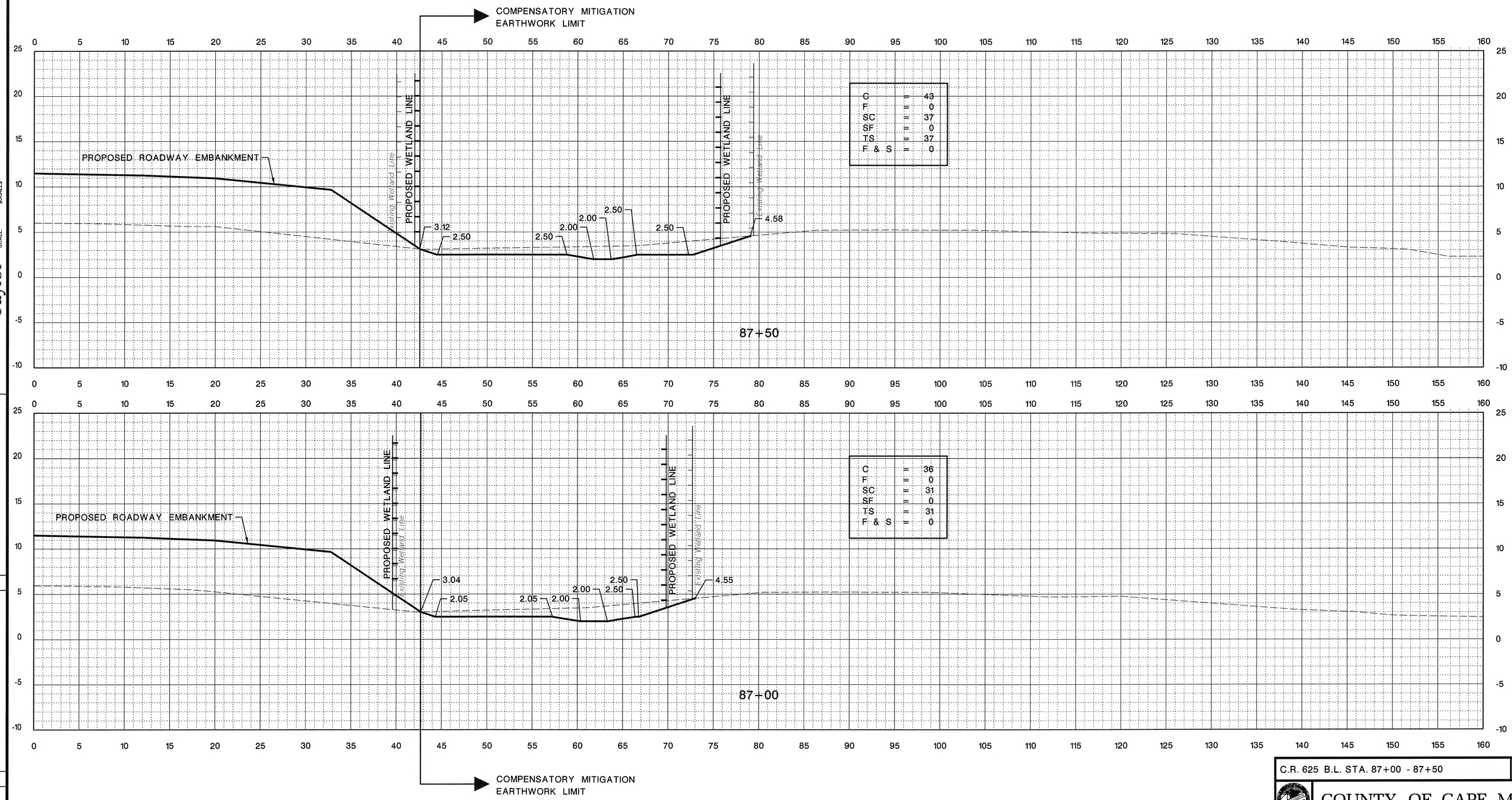

NOTE: THE EARTHWORK QUANTITY CALCULATIONS SHOWN ON EACH CROSS-SECTION ARE FOR THE MITIGATION AREA ONLY.

ROADWAY MEDIAN MITIGATION SITE

C.R. 625 B.L. STA. 87+00 - 87+50 | CM-8 / CM-16

COUNTY OF CAPE MAY

COMPENSATORY MITIGATION PLANS

SEA ISLE BOULEVARD (C.R. 625)
FROM GARDEN STATE PARKWAY TO
BRIDGE OVER LUDLAM THOROFARE

McCormick Taylor, Inc.
CERTIFICATION OF AUTHORIZATION NO. 24GA28044300
DATE: 4/3/09
ANTHONY M. DIMAGGIO, P.E.
NEW JERSEY PROFESSIONAL ENGINEER LICENSE NO. 24GE04136200

McCormick Taylor
Engineers & Planners Since 1946

FILE NAME: $FILEL$
PEN TABLE: $PENTBL$
REV. DATE: $DATE$
SCALE: $SCALE$

STATE	FEDERAL PROJECT NO.
N.J.	STP-0115(104)

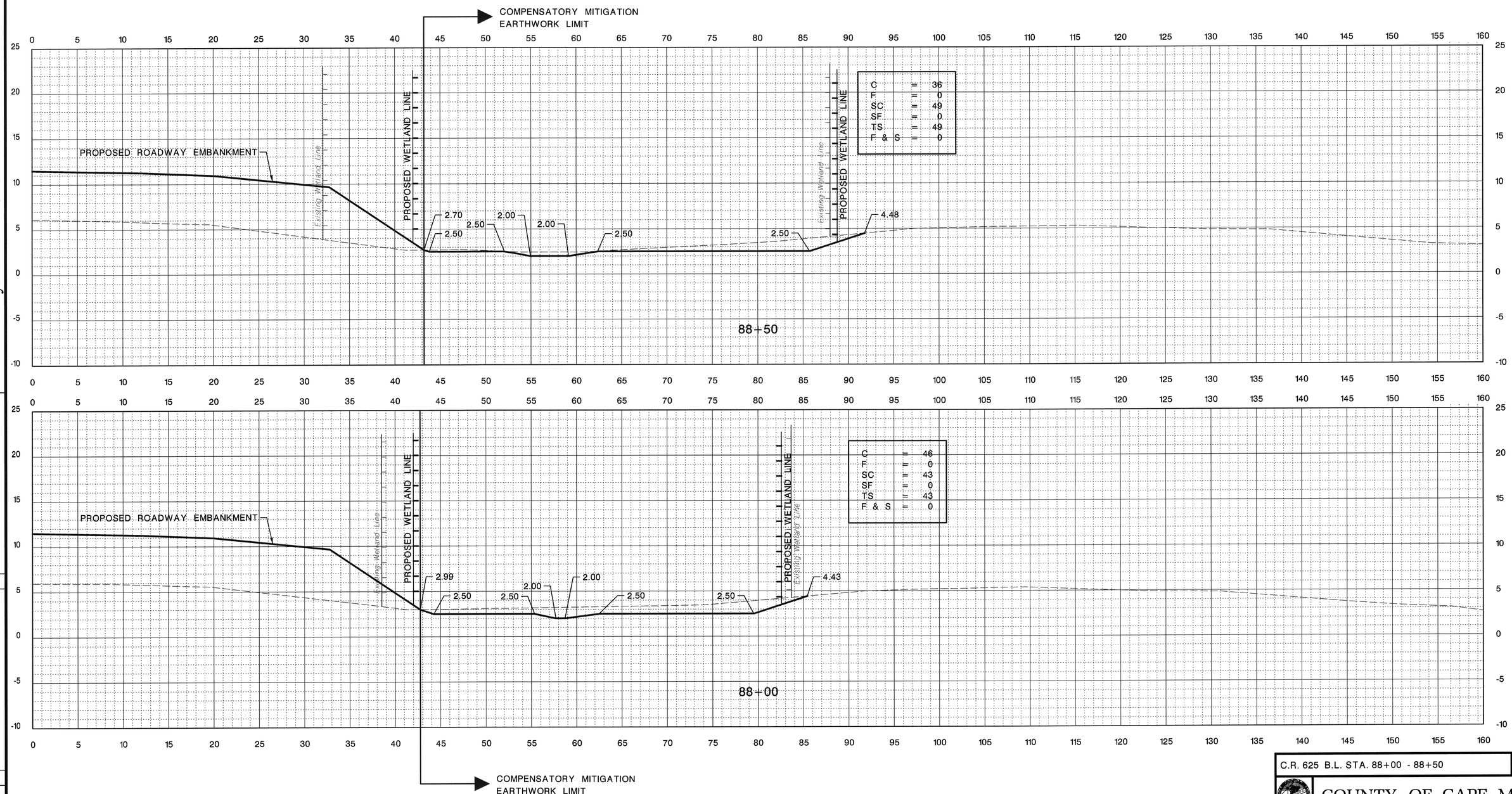

NOTE: THE EARTHWORK QUANTITY CALCULATIONS SHOWN ON EACH CROSS-SECTION ARE FOR THE MITIGATION AREA ONLY.

ROADWAY MEDIAN MITIGATION SITE

C.R. 625 B.L. STA. 88+00 - 88+50

CM-9 / CM-16

COUNTY OF CAPE MAY

COMPENSATORY MITIGATION PLANS

SEA ISLE BOULEVARD (C.R. 625)
FROM GARDEN STATE PARKWAY TO
BRIDGE OVER LUDLAM THOROFARE

McCormick Taylor, Inc.
CERTIFICATION OF AUTHORIZATION NO. 24GA28044300
DATE: 4/14/14
ANTHONY M. DIMAGGIO, P.E.
NEW JERSEY PROFESSIONAL ENGINEER LICENSE NO. 24GE04136200

McCormick Taylor
Engineers & Planners
Since 1946

FILE NAME: $FILEL$
PEN TABLE: $PENTBL$
REV DATE: $DATE$
SCALE: $SCALE$

STATE	FEDERAL PROJECT NO.
N.J.	STP-0115(104)

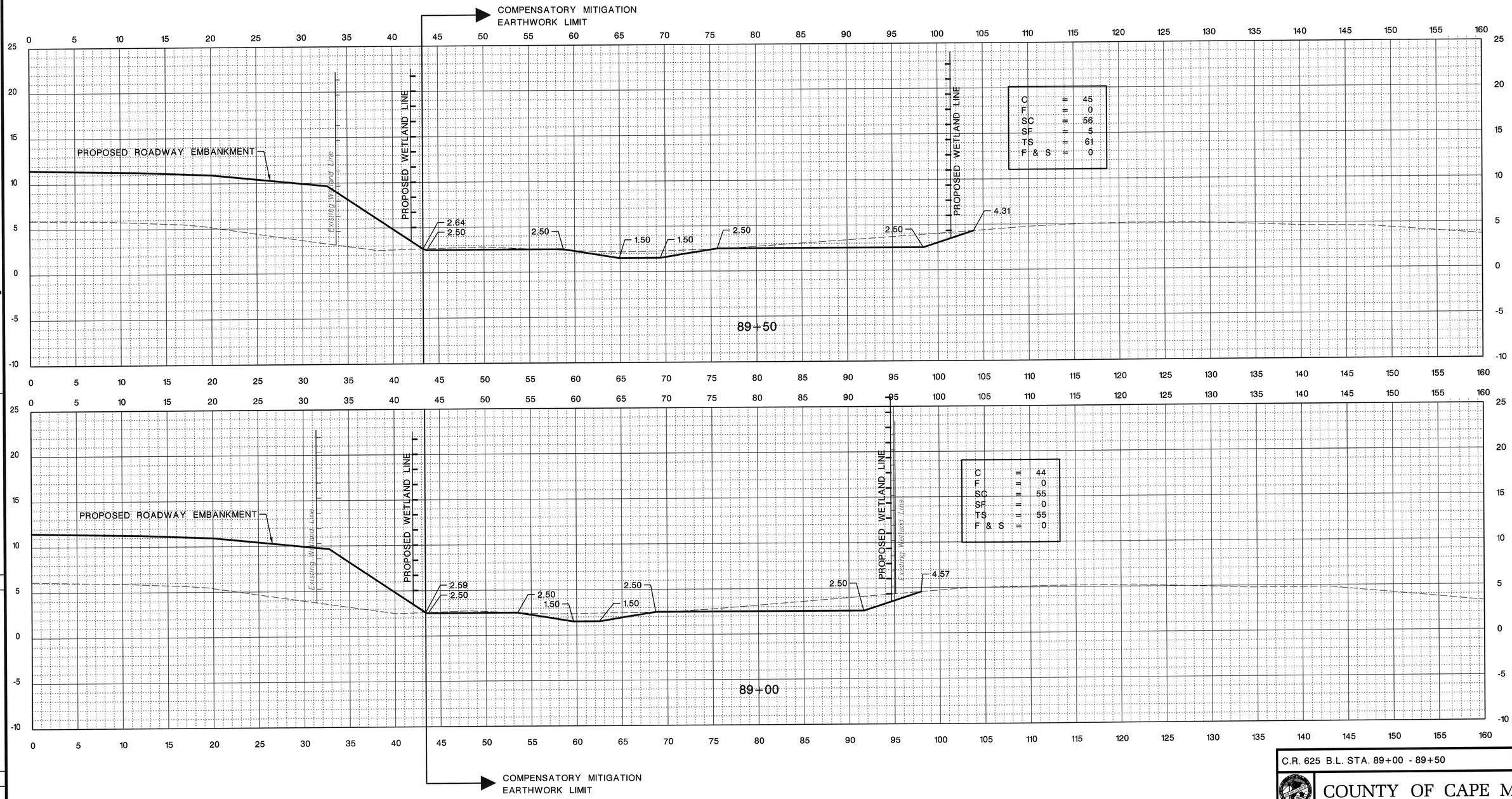

NOTE: THE EARTHWORK QUANTITY CALCULATIONS SHOWN ON EACH CROSS-SECTION ARE FOR THE MITIGATION AREA ONLY.

ROADWAY MEDIAN MITIGATION SITE

C.R. 625 B.L. STA. 89+00 - 89+50

CM-10 / CM-16

COUNTY OF CAPE MAY

COMPENSATORY MITIGATION PLANS

SEA ISLE BOULEVARD (C.R. 625)
FROM GARDEN STATE PARKWAY TO
BRIDGE OVER LUDLAM THOROFARE

McCormick Taylor, Inc.
CERTIFICATION OF AUTHORIZATION NO. 24GA28044300
DATE: 4/9/19
ANTHONY M. DIMAGGIO, P.E.
NEW JERSEY PROFESSIONAL ENGINEER LICENSE NO. 24GE04136200

164
170

McCormick Taylor
Engineers & Planners Since 1946

FILE NAME: $FILES
PEN TABLE: $PENTBLS
REF. DATE: $DATES
SCALE: $SCALES

STATE	FEDERAL PROJECT NO.
N.J.	STP-0115(104)

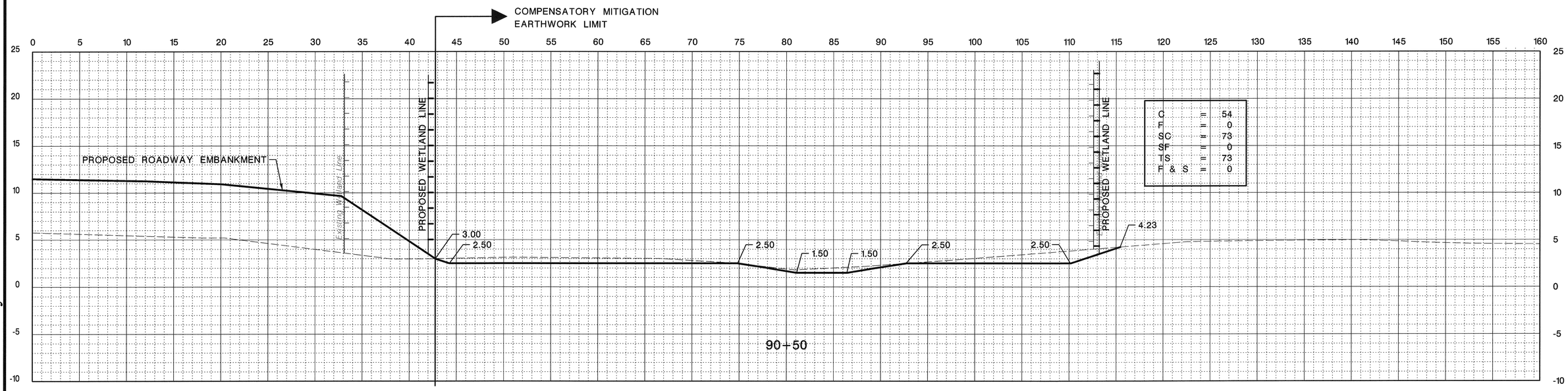

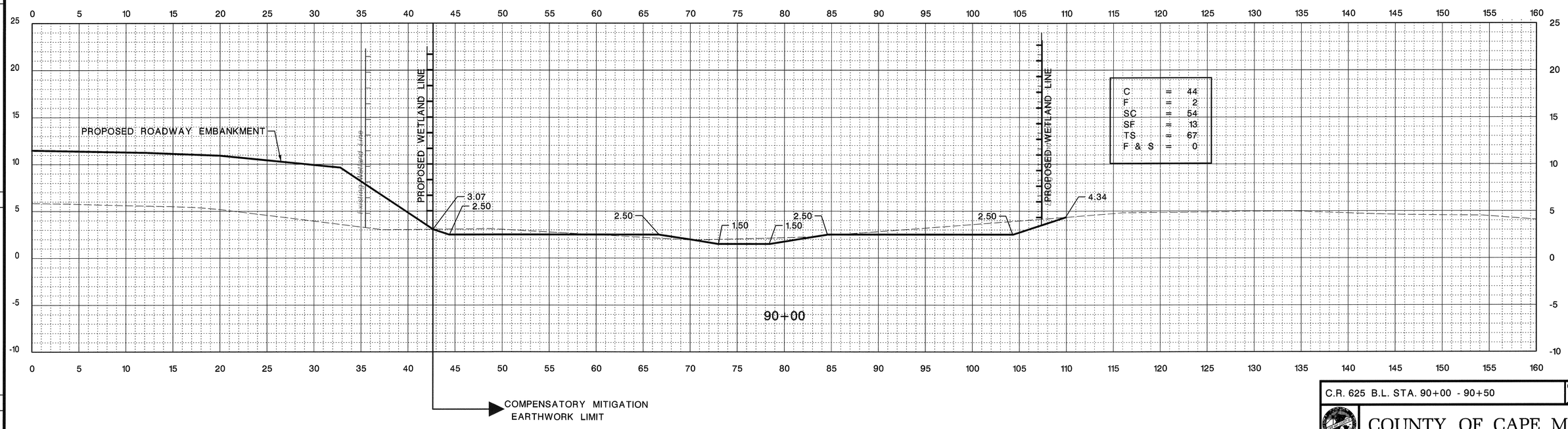

NOTE: THE EARTHWORK QUANTITY CALCULATIONS SHOWN ON EACH CROSS-SECTION ARE FOR THE MITIGATION AREA ONLY.

ROADWAY MEDIAN MITIGATION SITE

C.R. 625 B.L. STA. 90+00 - 90+50

CM-11 / CM-16

COUNTY OF CAPE MAY

COMPENSATORY MITIGATION PLANS

SEA ISLE BOULEVARD (C.R. 625)
FROM GARDEN STATE PARKWAY TO
BRIDGE OVER LUDLAM THOROFARE

McCormick Taylor, Inc.

CERTIFICATION OF AUTHORIZATION NO. 24GA28044300

DATE: 9/9/14

ANTHONY M. DIMAGGIO, P.E.

NEW JERSEY PROFESSIONAL ENGINEER LICENSE NO. 24GE04136200

McCormick Taylor
Engineers & Planners
Since 1946

FILE NAME: $FILEL$
PEN TABLE: $PENTBL$
REV. DATE: $DATE$
SCALE: $SCALE$

STATE	FEDERAL PROJECT NO.
N.J.	STP-0115(104)

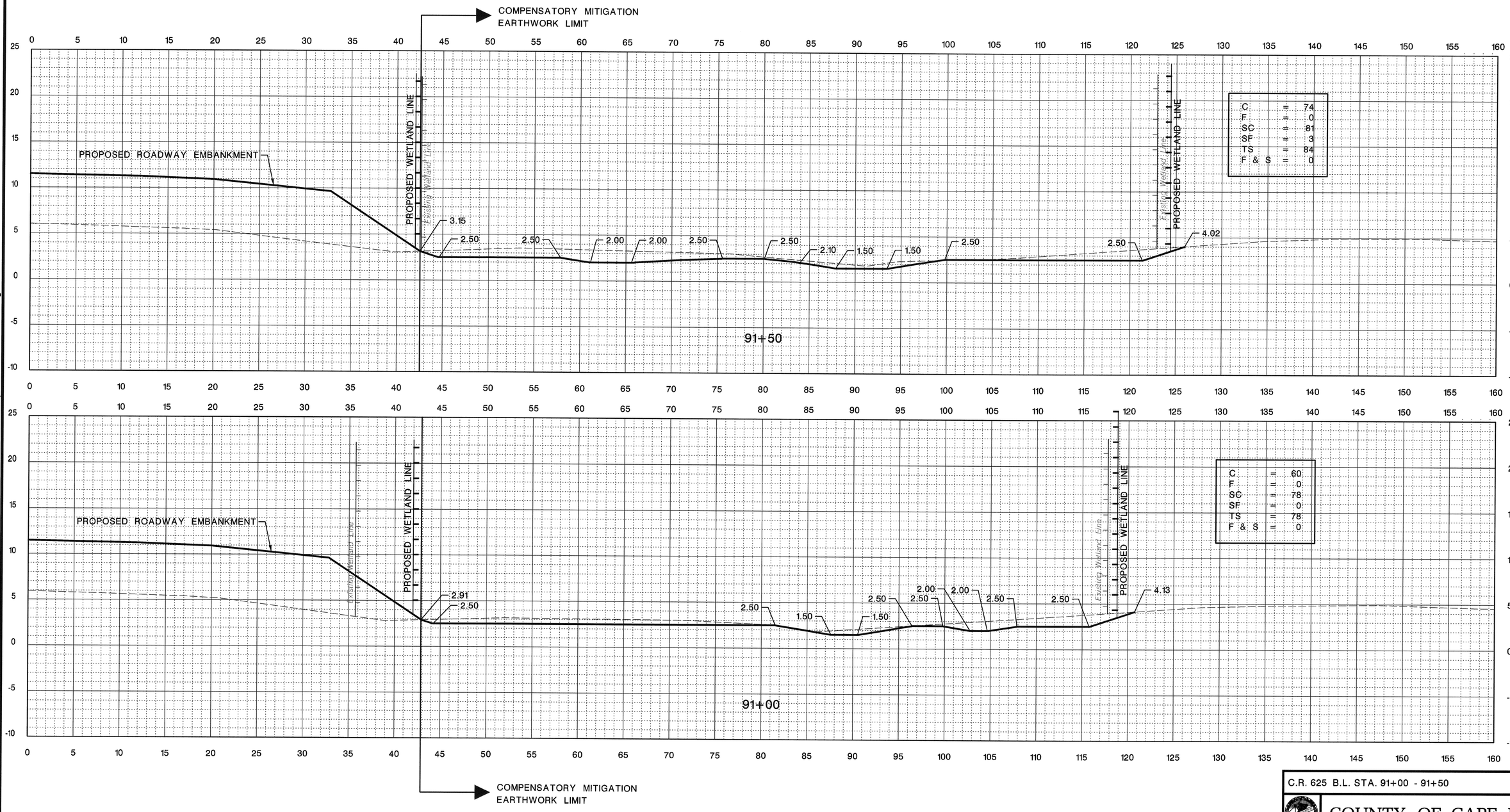

NOTE: THE EARTHWORK QUANTITY CALCULATIONS SHOWN ON EACH CROSS-SECTION ARE FOR THE MITIGATION AREA ONLY.

ROADWAY MEDIAN MITIGATION SITE

C.R. 625 B.L. STA. 91+00 - 91+50 | CM-12 / CM-16

COUNTY OF CAPE MAY

COMPENSATORY MITIGATION PLANS

SEA ISLE BOULEVARD (C.R. 625)
FROM GARDEN STATE PARKWAY TO
BRIDGE OVER LUDLAM THOROFARE

McCormick Taylor, Inc.
CERTIFICATION OF AUTHORIZATION NO. 24GA28044300
DATE: 4/4/14
ANTHONY M. DIMAGGIO, P.E.
NEW JERSEY PROFESSIONAL ENGINEER LICENSE NO. 24GE04136200

166
170

McCormick Taylor
Engineers & Planners Since 1946
FILE NAME: $FILEL$
PEN TABLE: $PENTBLL$
REV. DATE: $DATE$
SCALE: $SCALE$

STATE	FEDERAL PROJECT NO.
N.J.	STP-0115(104)

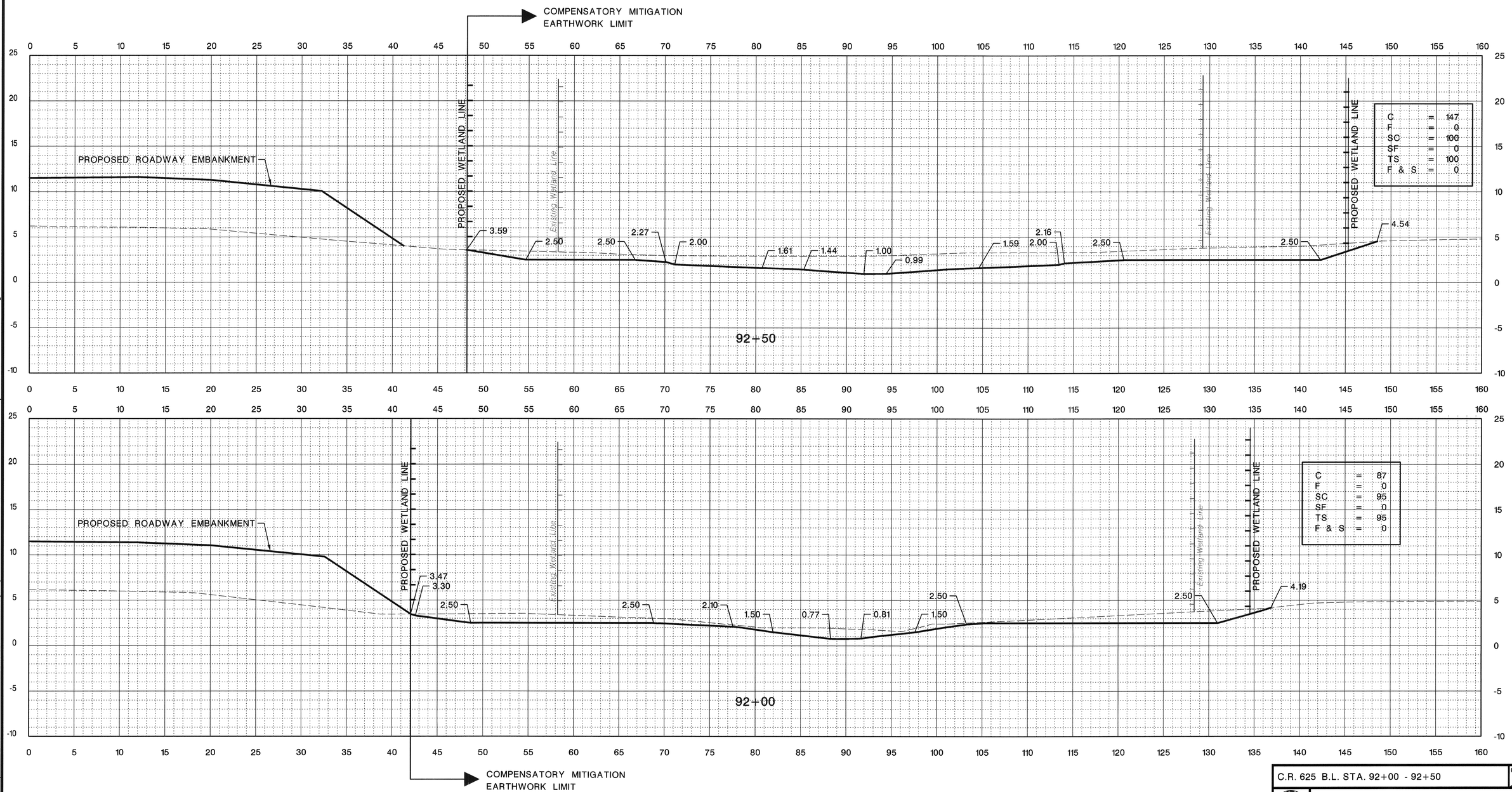

NOTE: THE EARTHWORK QUANTITY CALCULATIONS SHOWN ON EACH CROSS-SECTION ARE FOR THE MITIGATION AREA ONLY.

ROADWAY MEDIAN MITIGATION SITE

C.R. 625 B.L. STA. 92+00 - 92+50

CM-13 / CM-16

COUNTY OF CAPE MAY

COMPENSATORY MITIGATION PLANS

SEA ISLE BOULEVARD (C.R. 625)
FROM GARDEN STATE PARKWAY TO
BRIDGE OVER LUDLAM THOROFARE

McCormick Taylor, Inc.
CERTIFICATION OF AUTHORIZATION NO. 24GA28044300
DATE: 4/9/14
ANTHONY M. DIMAGGIO, P.E.
NEW JERSEY PROFESSIONAL ENGINEER LICENSE NO. 24GE04136200

McCormick Taylor
Engineers & Planners
Since 1946

FILE NAME: $FILEL$
PEN TABLE: $PENTBL$
REF DATE: $SDATE$
SCALE: $SCALE$

STATE	FEDERAL PROJECT NO.
N.J.	STP-0115(104)

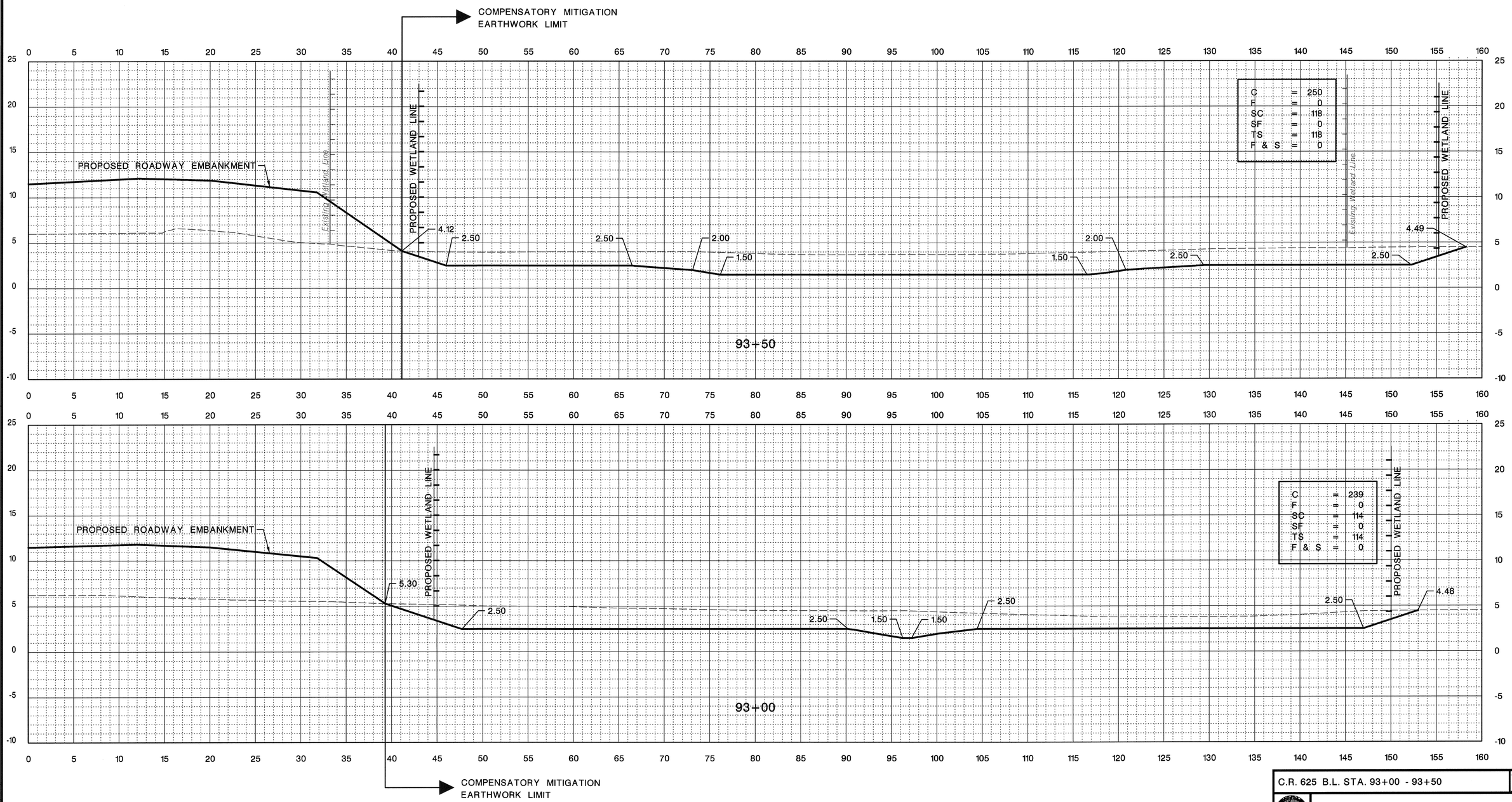

NOTE: THE EARTHWORK QUANTITY CALCULATIONS SHOWN ON EACH CROSS-SECTION ARE FOR THE MITIGATION AREA ONLY.

ROADWAY MEDIAN MITIGATION SITE

C.R. 625 B.L. STA. 93+00 - 93+50 | CM-14 / CM-16

COUNTY OF CAPE MAY

COMPENSATORY MITIGATION PLANS

SEA ISLE BOULEVARD (C.R. 625)
FROM GARDEN STATE PARKWAY TO
BRIDGE OVER LUDLAM THOROFARE

McCormick Taylor, Inc.
CERTIFICATION OF AUTHORIZATION NO. 24GA28044300
ANTHONY M. DIMAGGIO, P.E. DATE: 4/9/14
NEW JERSEY PROFESSIONAL ENGINEER LICENSE NO. 24GE04136200

168
170

McCormick Taylor
Engineers & Planners Since 1946

FILE NAME: $FILEL$
PEN TABLE: $PENTBL$
REF. DATE: $DATE$
SCALE: $SCALE$

STATE	FEDERAL PROJECT NO.
N.J.	STP-0115(104)

McCormick Taylor
Engineers & Planners
Since 1946

FILE NAME: $FILEL$
PEN TABLE: $PENTBL$
REV. DATE: $DATE$
SCALE: $SCALE$

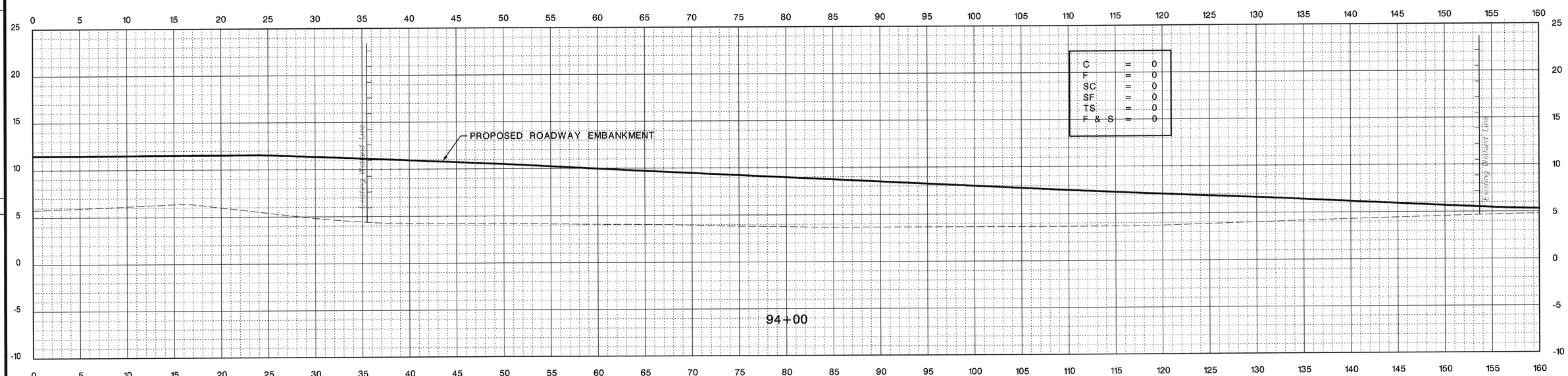

NOTE: THE EARTHWORK QUANTITY CALCULATIONS SHOWN ON EACH CROSS-SECTION ARE FOR THE MITIGATION AREA ONLY.

ROADWAY MEDIAN MITIGATION SITE

C.R. 625 B.L. STA. 94+00 - 94+00

CM-15 / CM-16

COUNTY OF CAPE MAY

COMPENSATORY MITIGATION PLANS

SEA ISLE BOULEVARD (C.R. 625)
FROM GARDEN STATE PARKWAY TO
BRIDGE OVER LUDLAM THOROFARE

McCormick Taylor, Inc.
CERTIFICATION OF AUTHORIZATION NO. 24GA28044300
DATE: 4/9/14
ANTHONY M. DIMAGGIO, P.E.
NEW JERSEY PROFESSIONAL ENGINEER LICENSE NO. 24GE04136200

STATE	FEDERAL PROJECT NO.
N.J.	STP-0115(104)

EARTHWORK SUMMARY

EXCAVATION

ROADWAY EXCAVATION, EARTH AVAILABLE FOR EMBANKMENT, COMMON

EXCAVATION FROM CROSS SECTIONS (COMPENSATORY MITIGATION PLANS)	1948 C.Y.
EXCAVATION FROM PLAN SHEETS	0 C.Y.
LESS STRIPPING IN CUTS	582 C.Y.
TOTAL EXCAVATION, UNCLASSIFIED	1366 C.Y.
TOTAL EXCAVATION, AVAILABLE FOR EMBANKMENT, COMMON (INCLUDING 10% SHRINKAGE)	1229 C.Y.

EMBANKMENT

EMBANKMENT, I-11 REQUIRED

EMBANKMENT FROM CROSS SECTIONS (COMPENSATORY MITIGATION PLANS)	4 C.Y.
EMBANKMENT FROM PLAN SHEETS	0 C.Y.
STRIPPING IN FILLS	13 C.Y.
TOTAL EMBANKMENT, I-11 REQUIRED	17 C.Y.

EXCAVATED MATERIALS EXCESS (SUITABLE FOR EMBANKMENT)	1213 C.Y.
EXCAVATED MATERIALS TO BE BORROWED (SUITABLE FOR EMBANKMENT)	NO BORROW REQUIRED

TOPSOILING

TOPSOIL AVAILABLE

STRIPPING IN CUTS	582 C.Y.
STRIPPING IN FILLS	13 C.Y.
TOTAL STRIPPING AVAILABLE FOR TOPSOIL	595 C.Y.

TOPSOIL REQUIRED

TOPSOILING, 4" THICK FROM CROSS SECTIONS (COMPENSATORY MITIGATION PLANS)	5589 S.Y.
TOPSOILING, 4" THICK REQUIRED IN S.Y.	5589 S.Y.
TOPSOILING, 4" THICK REQUIRED IN C.Y.	621 C.Y.
STRIPPING MATERIALS EXCESS (SUITABLE FOR TOPSOILING)	NO ACCESS AVAILABLE
STRIPPING MATERIALS TO BE BORROWED	26 C.Y.

NOTES:

1. IF ADDITIONAL SUITABLE MATERIAL FOR EMBANKMENT IS OBTAINED FROM ANY EXCAVATION, THE QUANTITY OF BORROW WILL BE REDUCED ACCORDINGLY.
2. IF ADDITIONAL SUITABLE MATERIAL FOR TOPSOIL IS OBTAINED FROM ANY STRIPPING, THE QUANTITY OF TOPSOIL WILL BE REDUCED ACCORDINGLY.

NOTE: THE EARTHWORK QUANTITY CALCULATIONS SHOWN ON EACH CROSS-SECTION ARE FOR THE MITIGATION AREA ONLY.

MITIGATION AREA ONLY

McCormick Taylor
Engineers & Planners Since 1946

FILE NAME: $FILE$
PEN TABLE: $PENTBL$
REV. DATE: $DATE$
SCALE: $SCALE$

CM-16 / CM-16

COUNTY OF CAPE MAY

COMPENSATORY MITIGATION PLANS

SEA ISLE BOULEVARD (C.R. 625) FROM GARDEN STATE PARKWAY TO BRIDGE OVER LUDLAM THOROFARE

McCormick Taylor, Inc.
CERTIFICATION OF AUTHORIZATION NO. 24GA28044300
DATE: 4/4/14
ANTHONY M. DIMAGGIO, P.E.
NEW JERSEY PROFESSIONAL ENGINEER LICENSE NO. 24GE04136200